HOSHIZAKI

Instruction Manual

Stackable Crescent Cuber

Models

KM-1301SAH/3, SWH/3, SRH/3
KM-1601SAH/3, SWH/3, SRH3
KM-1900SAH/3, SWH/3, SRH/3
KM-2100SWH3, SRH3
KM-2500SWH3, SRH3

hoshizakiamerica.com

Issued: 6-11-2015
Revised: 8-7-2017

⚠ WARNING

Only qualified service technicians should install and service the appliance. To obtain the name and phone number of your local Hoshizaki Certified Service Representative, visit www.hoshizaki.com. No installation or service should be undertaken until the technician has thoroughly read this Instruction Manual. Likewise, the owner/manager should not proceed to operate the appliance until the installer has instructed them on its proper operation. Failure to install, operate, and maintain the appliance in accordance with this manual will adversely affect safety, performance, component life, and warranty coverage and may result in costly water damage. Proper installation is the responsibility of the installer. Product failure or property damage due to improper installation is not covered under warranty.

Hoshizaki provides this manual primarily to assist qualified service technicians in the installation, maintenance, and service of the appliance.

Should the reader have any questions or concerns which have not been satisfactorily addressed, please call, send an e-mail message, or write to the Hoshizaki Technical Support Department for assistance.

Phone: 1-800-233-1940; (770) 487-2331
Fax: 1-800-843-1056; (770) 487-3360

E-mail: techsupport@hoshizaki.com

HOSHIZAKI AMERICA, INC.

618 Highway 74 South
Peachtree City, GA 30269
Attn: Hoshizaki Technical Support Department

NOTE: To expedite assistance, all correspondence/communication MUST include the following information:

- Model Number _____
- Serial Number _____
- Complete and detailed explanation of the problem.

IMPORTANT
This manual should be read carefully before the appliance is installed and operated. Read the warnings and guidelines contained in this manual carefully as they provide essential information for the continued safe use and maintenance of the appliance. Retain this manual for any further reference that may be necessary.

CONTENTS

Important Safety Information 6
I. Specifications 8
A. Electrical and Refrigerant Data 8
1. KM-1301S_H/3 8
2. KM-1601S_H/3 9
3. KM-1900S_H/3 10
4. KM-2100S_H3 11
5. KM-2500S_H3 11
B. Dimensions/Connections 12
1. Air-Cooled Models (SAH/3) 12
2. Water-Cooled Models (SWH/3) 13
3. Remote Models (SRH/3) 14
4. Remote Condenser Unit URC-14F (use with KM-1301SRH/3) 15
5. Remote Condenser Unit URC-22F (use with KM-1601SRH/3, KM-1900SRH/3, KM-2100SRH3) and URC-23F (use with KM-2500SRH3) 15
II. Installation and Operating Instructions 16
A. Location 16
B. Checks Before Installation 16
C. How to Remove Panels 17
D. Setup 18
1. Dispenser Unit/Ice Storage Bin and Icemaker Setup 18
2. Bin Control Installation 19
3. Installation of Upper Unit 20
E. Electrical Connection 22
F. Water Supply and Drain Connections 24
1. Icemaker 25
2. Water-Cooled Condenser 26
G. Installation of Remote Condenser Unit 28
1. Location 28
2. Checks Before Installation 29
3. Setup 29
4. Line Set Size and Refrigerant Charge 29
5. Line Set Installation 30
6. Electrical Connection 33
7. Stacking Remote Condenser Unit 34
H. Final Checklist 35
I. Startup 36

III. Maintenance 37
A. Maintenance Schedule 37
B. Cleaning and Sanitizing Instructions 38
IV. Preparing the Icemaker for Periods of Non-Use 42
V. Disposal 44

Intentionally Left Blank

Important Safety Information

Throughout this manual, notices appear to bring your attention to situations which could result in death, serious injury, damage to the appliance, or damage to property.

⚠ WARNING **Indicates a hazardous situation which could result in death or serious injury.**

NOTICE **Indicates a situation which could result in damage to the appliance or property.**

IMPORTANT **Indicates important information about the installation, use, and care of the appliance.**

⚠ WARNING

The appliance should be destined only to the use for which it has been expressly conceived. Any other use should be considered improper and therefore dangerous. The manufacturer cannot be held responsible for injury or damage resulting from improper, incorrect, and unreasonable use. Failure to install, operate, and maintain the appliance in accordance with this manual will adversely affect safety, performance, component life, and warranty coverage and may result in costly water damage.

To reduce the risk of death, electric shock, serious injury, or fire, follow basic precautions including the following:

- Only qualified service technicians should install and service the appliance.
- The appliance must be installed in accordance with applicable national, state, and local codes and regulations.
- Electrical connection must be hard-wired and must meet national, state, and local electrical code requirements. Failure to meet these code requirements could result in death, electric shock, serious injury, fire, or damage.
- The icemaker requires an independent power supply of proper capacity. See the nameplate for electrical specifications. Failure to use an independent power supply of proper capacity can result in a tripped breaker, blown fuse, damage to existing wiring, or component failure. This could lead to heat generation or fire.
- **THE ICEMAKER MUST BE GROUNDED.** Failure to properly ground the icemaker could result in death or serious injury.
- To reduce the risk of electric shock, do not touch the control switch with damp hands.
- Move the control switch to the "OFF" position and turn off the power supply before servicing. Lockout/Tagout to prevent the power supply from being turned back on inadvertently.
- Do not make any alterations to the appliance. Alterations could result in electric shock, serious injury, fire, or damage.
- The appliance is not intended for use by persons (including children) with reduced physical, sensory, or mental capabilities, or lack of experience and knowledge, unless they have been given supervision or instruction concerning use of the appliance by a person responsible for their safety.

⚠ WARNING, continued

- Children should be properly supervised around the appliance.
- Do not climb, stand, or hang on the appliance or allow children or animals to do so. Serious injury could occur or the appliance could be damaged.
- Do not use combustible spray or place volatile or flammable substances near the appliance. They might catch fire.
- Keep the area around the appliance clean. Dirt, dust, or insects in the appliance could cause harm to individuals or damage to the appliance.

Additional Warning for Remote Models

- **THE REMOTE CONDENSER UNIT MUST BE GROUNDED.** The power supply and ground connection to the remote condenser unit are supplied from the icemaker. Failure to properly ground the remote condenser unit could result in death or serious injury.
- Wire routing (conduit) and disconnect (if required) must meet national, state, and local electrical code requirements. Failure to meet these code requirements could result in death, electric shock, serious injury, fire, or damage.

NOTICE

- Follow the water supply, drain connection, and maintenance instructions carefully to reduce the risk of costly water damage.
- In areas where water damage is a concern, install in a contained area with a floor drain.
- Install the icemaker in a location that stays above freezing. Normal operating ambient temperature must be within 45°F to 100°F (7°C to 38°C).
- Do not leave the icemaker on during extended periods of non-use, extended absences, or in sub-freezing temperatures. To properly prepare the icemaker for these occasions, follow the instructions in "IV. Preparing the Icemaker for Periods of Non-Use."
- Do not place objects on top of the appliance.
- The dispenser unit/ice storage bin is for ice use only. Do not store anything else in the dispenser unit/ice storage bin.

I. Specifications

A. Electrical and Refrigerant Data

The rating label and nameplate provide electrical and refrigerant data. The rating label can be seen by removing the front panel. The nameplate is located on the rear panel. For certification marks, see the nameplate.
We reserve the right to make changes in specifications and design without prior notice.

1. KM-1301S_H/3

Single Phase			
Model Number	**KM-1301SAH**	**KM-1301SWH**	**KM-1301SRH**
AC Supply Voltage	208-230/60/1	208-230/60/1	208-230/60/1
Compressor	208-230V 10.0RLA 61LRA	208-230V 8.2RLA 56LRA	208-230V 9.3RLA 56LRA
Pump	120V 1.2FLA 60W	120V 1.2FLA 60W	120V 1.2FLA 60W
Fan	115V 1.0FLA 1/15HP	--- --- ---	120V 3A MAX (Fans in URC)
Other	115-120V 0.3A	115-120V 0.3A	115-120V 0.3A
Maximum Fuse Size	20 AMPS	20 AMPS	20 AMPS
Max. HACR Breaker (USA Only)	20 AMPS	20 AMPS	20 AMPS
Max. Circuit Breaker (Canada Only)	20 AMPS	20 AMPS	20 AMPS
Minimum Circuit Ampacity	20 AMPS	20 AMPS	20 AMPS
Design Pressure	HI-467PSI LO-230PSI	HI-427PSI LO-230PSI	HI-467PSI LO-230PSI
Refrigerant	404A 3 LB. 15.4 OZ.	404A 2 LB. 2.4 OZ.	404A Total Refrigerant Charge with Hoshizaki Remote Condenser Unit URC-14F: 10 LB. 5.8 OZ.

Three Phase			
Model Number	**KM-1301SAH3**	**KM-1301SWH3**	**KM-1301SRH3**
AC Supply Voltage	208-230/60/3	208-230/60/3	208-230/60/3
Compressor	208-230V 7.1RLA 55LRA	208-230V 6.1RLA 51LRA	208-230V 6.2RLA 51LRA
Pump	120V 1.2FLA 60W	120V 1.2FLA 60W	120V 1.2FLA 60W
Fan	115V 1.0FLA 1/15HP	--- --- ---	120V 3A MAX (Fans in URC)
Other	115-120V 0.3A	115-120V 0.3A	115-120V 0.3A
Maximum Fuse Size	20 AMPS	20 AMPS	20 AMPS
Max. HACR Breaker (USA Only)	20 AMPS	20 AMPS	20 AMPS
Max. Circuit Breaker (Canada Only)	20 AMPS	20 AMPS	20 AMPS
Minimum Circuit Ampacity	20 AMPS	20 AMPS	20 AMPS
Design Pressure	HI-467PSI LO-230PSI	HI-427PSI LO-230PSI	HI-467PSI LO-230PSI
Refrigerant	404A 3 LB. 15.4 OZ.	404A 2 LB. 2.4 OZ.	404A Total Refrigerant Charge with Hoshizaki Remote Condenser Unit URC-14F: 10 LB. 5.8 OZ.

2. KM-1601S_H/3

Single Phase			
Model Number	**KM-1601SAH**	**KM-1601SWH**	**KM-1601SRH**
AC Supply Voltage	208-230/60/1 (3 Wire with Neutral)	208-230/60/1 (3 Wire with Neutral)	208-230/60/1 (3 Wire with Neutral)
Compressor	230V 12.1RLA 96LRA	230V 12.1RLA 82LRA	230V 12.8RLA 82LRA
Pump	120V 1.2FLA 60W	120V 1.2FLA 60W	120V 1.2FLA 60W
Fan	115V 1.0FLA 1/15HP	--- --- ---	120V 3A MAX (Fans in URC)
Other	115V 0.3A	115V 0.3A	115V 0.3A
Maximum Fuse Size	20 AMPS	20 AMPS	20 AMPS
Max. HACR Breaker (USA Only)	20 AMPS	20 AMPS	20 AMPS
Max. Circuit Breaker (Canada Only)	20 AMPS	20 AMPS	20 AMPS
Minimum Circuit Ampacity	20 AMPS	20 AMPS	20 AMPS
Design Pressure	HI-467PSI LO-230PSI	HI-427PSI LO-230PSI	HI-467PSI LO-230PSI
Refrigerant	404A 3 LB. 12.5 OZ.	404A 2 LB. 6.8 OZ.	404A Total Refrigerant Charge with Hoshizaki Remote Condenser Unit URC-22F: 22 LB. 15 OZ.

Three Phase			
Model Number	**KM-1601SAH3**	**KM-1601SWH3**	**KM-1601SRH3**
AC Supply Voltage	208-230/60/3	208-230/60/3	208-230/60/3
Compressor	230V 9.3RLA 55LRA	230V 7.3RLA 65.5LRA	230V 7.9RLA 65.5LRA
Pump	120V 1.2FLA 60W	120V 1.2FLA 60W	120V 1.2FLA 60W
Fan	115V 1.0FLA 1/15HP	--- --- ---	120V 3A MAX (Fans in URC)
Other	115V 0.3A	115V 0.3A	115V 0.3A
Maximum Fuse Size	20 AMPS	20 AMPS	20 AMPS
Max. HACR Breaker (USA Only)	20 AMPS	20 AMPS	20 AMPS
Max. Circuit Breaker (Canada Only)	20 AMPS	20 AMPS	20 AMPS
Minimum Circuit Ampacity	20 AMPS	20 AMPS	20 AMPS
Design Pressure	HI-467PSI LO-230PSI	HI-427PSI LO-230PSI	HI-467PSI LO-230PSI
Refrigerant	404A 3 LB. 12.5 OZ.	404A 2 LB. 6.8 OZ.	404A Total Refrigerant Charge with Hoshizaki Remote Condenser Unit URC-22F: 22 LB. 15 OZ.

3. KM-1900S_H/3

Single Phase			
Model Number	**KM-1900SAH**	**KM-1900SWH**	**KM-1900SRH**
AC Supply Voltage	208-230/60/1 (3 Wire with Neutral)	208-230/60/1 (3 Wire with Neutral)	208-230/60/1 (3 Wire with Neutral)
Compressor	230V 11.3RLA 73LRA	230V 11.1RLA 73LRA	230V 11.4RLA 73LRA
Pump	120V 1.2FLA 60W	120V 1.2FLA 60W	120V 1.2FLA 60W
Fan	115V 1.0FLA 1/15HP (QTY 2)	--- --- ---	120V 3A MAX (Fans in URC)
Other	115V 0.3A	115V 0.3A	115V 0.3A
Maximum Fuse Size	30 AMPS	30 AMPS	30 AMPS
Max. HACR Breaker (USA Only)	30 AMPS	30 AMPS	30 AMPS
Max. Circuit Breaker (Canada Only)	30 AMPS	30 AMPS	30 AMPS
Minimum Circuit Ampacity	30 AMPS	30 AMPS	30 AMPS
Design Pressure	HI-467PSI LO-230PSI	HI-427PSI LO-230PSI	HI-467PSI LO-230PSI
Refrigerant	404A 4 LB. 10.1 OZ.	404A 3 LB. 1.4 OZ.	404A Total Refrigerant Charge with Hoshizaki Remote Condenser Unit URC-22F: 21 LB. 7.7 OZ.

Three Phase			
Model Number	**KM-1900SAH3**	**KM-1900SWH3**	**KM-1900SRH3**
AC Supply Voltage	208-230/60/3	208-230/60/3	208-230/60/3
Compressor	230V 8.4RLA 66LRA	230V 7.8RLA 66LRA	230V 8.0RLA 66LRA
Pump	120V 1.2FLA 60W	120V 1.2FLA 60W	120V 1.2FLA 60W
Fan	115V 1.0FLA 1/15HP (QTY 2)	--- --- ---	120V 3A MAX (Fans in URC)
Other	115V 0.3A	115V 0.3A	115V 0.3A
Maximum Fuse Size	20 AMPS	20 AMPS	20 AMPS
Max. HACR Breaker (USA Only)	20 AMPS	20 AMPS	20 AMPS
Max. Circuit Breaker (Canada Only)	20 AMPS	20 AMPS	20 AMPS
Minimum Circuit Ampacity	20 AMPS	20 AMPS	20 AMPS
Design Pressure	HI-467PSI LO-230PSI	HI-427PSI LO-230PSI	HI-467PSI LO-230PSI
Refrigerant	404A 4 LB. 10.1 OZ.	404A 3 LB. 1.4 OZ.	404A Total Refrigerant Charge with Hoshizaki Remote Condenser Unit URC-22F: 21 LB. 7.7 OZ.

4. KM-2100S_H3

Three Phase		
Model Number	**KM-2100SWH3**	**KM-2100SRH3**
AC Supply Voltage	208-230/60/3	208-230/60/3
Compressor	230V 9.0RLA 75LRA	230V 9.2RLA 75LRA
Pump	120V 1.2FLA 60W	120V 1.2FLA 60W
Fan	--- --- ---	120V 3A MAX (Fans in URC)
Other	115V 0.3A	115V 0.3A
Maximum Fuse Size	20 AMPS	20 AMPS
Max. HACR Breaker (USA Only)	20 AMPS	20 AMPS
Max. Circuit Breaker (Canada Only)	20 AMPS	20 AMPS
Minimum Circuit Ampacity	20 AMPS	20 AMPS
Design Pressure	HI-427PSI LO-230PSI	HI-467PSI LO-230PSI
Refrigerant	404A 3 LB.	404A Total Refrigerant Charge with Hoshizaki Remote Condenser Unit URC-22F: 16 LB. 2 OZ.

5. KM-2500S_H3

Three Phase		
Model Number	**KM-2500SWH3**	**KM-2500SRH3**
AC Supply Voltage	208-230/60/3	208-230/60/3
Compressor	230V 12.2RLA 105LRA	230V 15.38RLA 130LRA
Pump	120V 1.2FLA 60W	120V 1.2FLA 60W
Fan	--- --- ---	120V 3A MAX (Fans in URC)
Other	115V 0.8A	115V 0.8A
Maximum Fuse Size	30 AMPS	30 AMPS
Max. HACR Breaker (USA Only)	30 AMPS	30 AMPS
Max. Circuit Breaker (Canada Only)	30 AMPS	30 AMPS
Minimum Circuit Ampacity	30 AMPS	30 AMPS
Design Pressure	HI-427PSI LO-230PSI	HI-467PSI LO-230PSI
Refrigerant	404A 3 LB. 7.6 OZ.	404A Total Refrigerant Charge with Hoshizaki Remote Condenser Unit URC-23F: 24 LB. 9.5 OZ.

B. Dimensions/Connections

1. Air-Cooled Models (SAH/3)

Units: mm [in.]

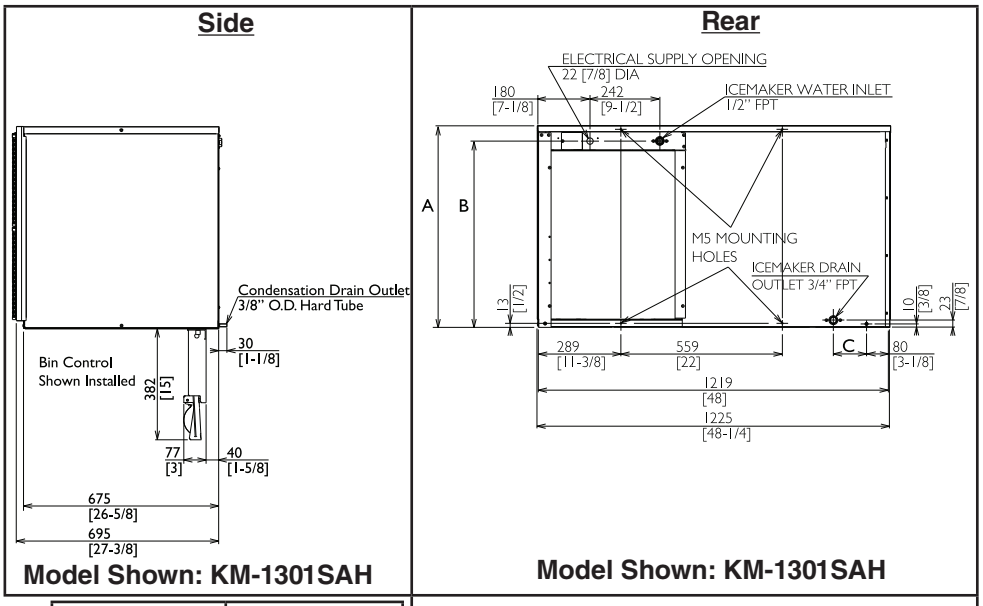

Model Shown: KM-1301SAH

Model Shown: KM-1301SAH

	KM-1301SAH/3 KM-1601SAH/3	KM-1900SAH/3
A	695 [27-3/8]	925 [36-3/8]
B	643 [25-3/8]	873 [34-3/8]
C	115 [4-1/2]	130 [5-1/8]

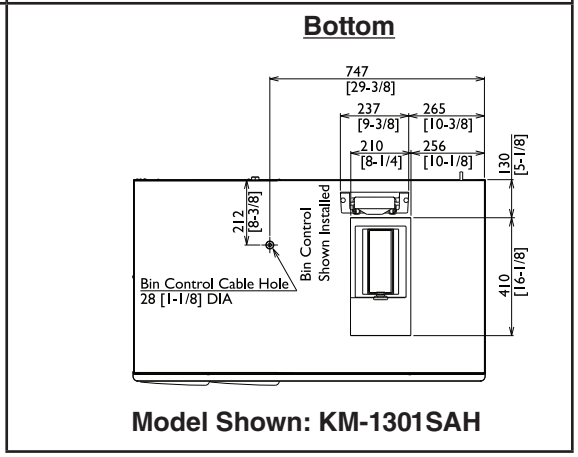

Model Shown: KM-1301SAH

NOTICE

- For all models except KM-1601SAH/3, allow 6" (15 cm) clearance at rear, sides, and top for proper air circulation and ease of maintenance and/or service should they be required. For KM-1601SAH/3, allow 9" (23 cm) clearance at rear, sides, and top.
- The ice storage bin opening must match the bottom opening as in the illustration.

2. Water-Cooled Models (SWH/3)

Units: mm [in.]

Side

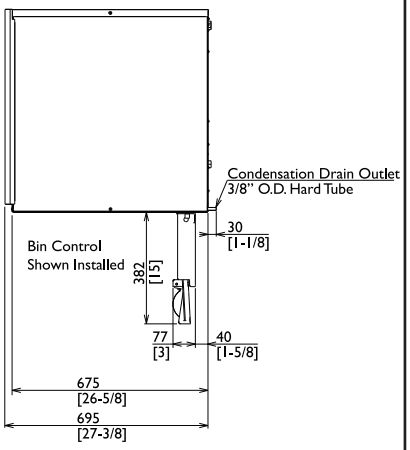

Model Shown: KM-1301SWH

Rear

KM-1301/1601/1900/2100SWH/3

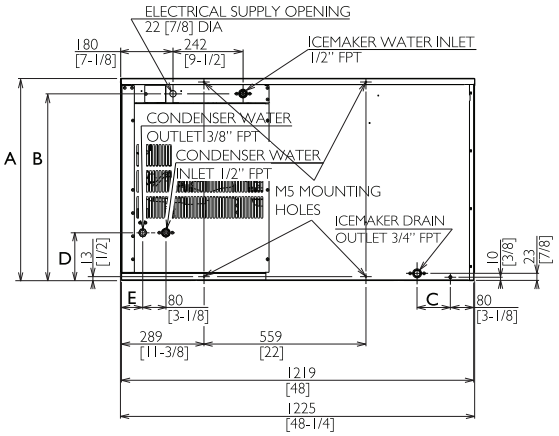

Model Shown: KM-1301SWH

	KM-1301SWH/3	KM-1601SWH/3	KM-1900SWH/3 KM-2100SWH3	KM-2500SWH3
A	695 [27-3/8]	695 [27-3/8]	925 [36-3/8]	925 [36-3/8]
B	643 [25-3/8]	643 [25-3/8]	873 [34-3/8]	873 [34-3/8]
C	115 [4-1/2]	115 [4-1/2]	130 [5-1/8]	130 [5-1/8]
D	164 [6-1/2]	199 [7-7/8]	298 [11-3/4]	162 [6-3/8]
E	74 [2-7/8]	85 [3-3/8]	85 [3-3/8]	110 [4-3/8]

Rear

KM-2500SWH3

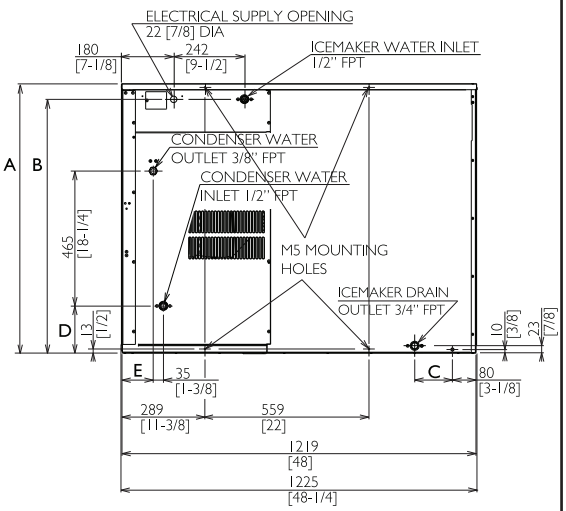

Model Shown: KM-2500SWH3

NOTICE

- Allow 6" (15 cm) clearance at rear, sides, and top for proper air circulation and ease of maintenance and/or service should they be required.
- The ice storage bin opening must match the bottom opening as in the illustration.

Bottom

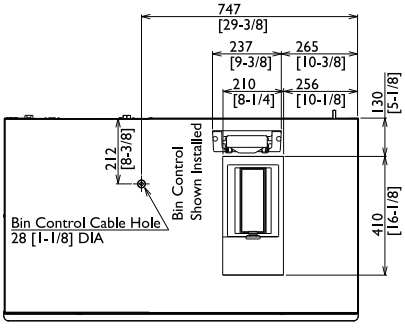

Model Shown: KM-1301SWH

3. Remote Models (SRH/3)

Units: mm [in.]

Side

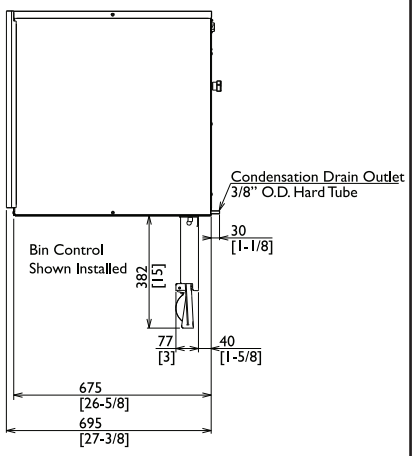

Model Shown: KM-1301SRH

Rear

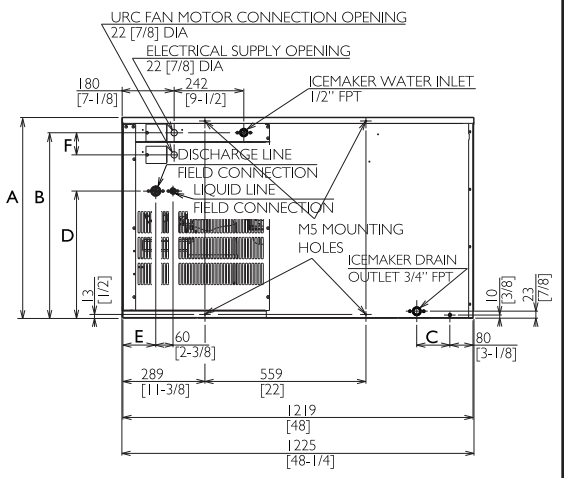

Model Shown: KM-1301SRH

	KM-1301SRH/3	KM-1601SRH/3	KM-1900SRH/3 KM-2100SRH3	KM-2500SRH3
A	695 [27-3/8]	695 [27-3/8]	925 [36-3/8]	925 [36-3/8]
B	643 [25-3/8]	643 [25-3/8]	873 [34-3/8]	873 [34-3/8]
C	115 [4-1/2]	115 [4-1/2]	130 [5-1/8]	130 [5-1/8]
D	442 [17-3/8]	442 [17-3/8]	673 [26-1/2]	410 [16-1/8]
E	115 [4-1/2]	115 [4-1/2]	115 [4-1/2]	120 [4-3/4]
F	76 [3]	100 [3-7/8]	74 [2-7/8]	75 [3]

Bottom

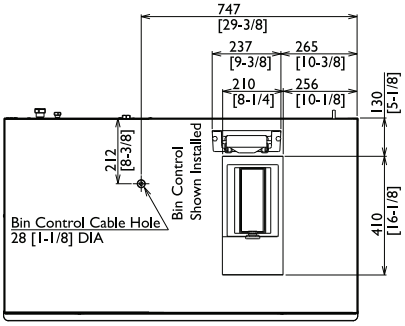

Model Shown: KM-1301SRH

NOTICE

- Allow 6" (15 cm) clearance at rear, sides, and top for proper air circulation and ease of maintenance and/or service should they be required.
- The ice storage bin opening must match the bottom opening as in the illustration.

4. Remote Condenser Unit URC-14F (use with KM-1301SRH/3)

Units: mm [in.]

NOTICE
Allow 24" (61 cm) clearance at front and rear for proper air circulation and ease of maintenance and/or service should they be required.

Top

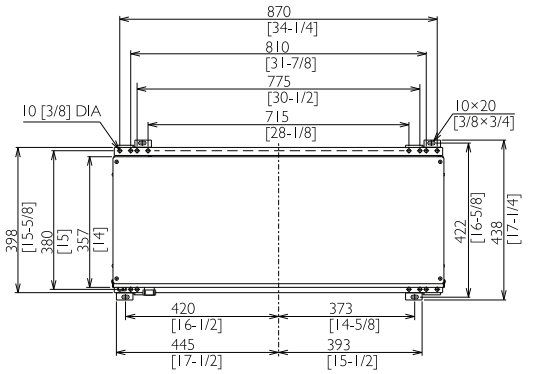

Rear

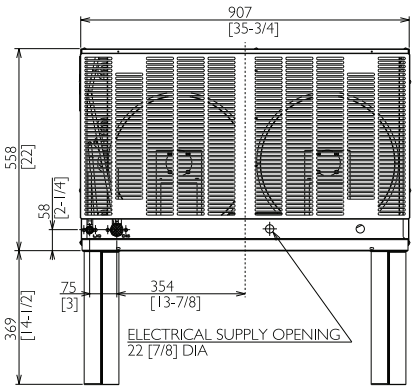

Icemaker Model	URC-14F Heat of Rejection AT 90°F (32°C) WT 70°F (21°C)
KM-1301SRH	17,600 BTU/hr
KM-1301SRH3	17,500 BTU/hr

5. Remote Condenser Unit URC-22F (use with KM-1601SRH/3, KM-1900SRH/3, KM-2100SRH3) and URC-23F (use with KM-2500SRH3)

Units: mm [in.]

NOTICE
Allow 24" (61 cm) clearance at front and rear for proper air circulation and ease of maintenance and/or service should they be required.

Top

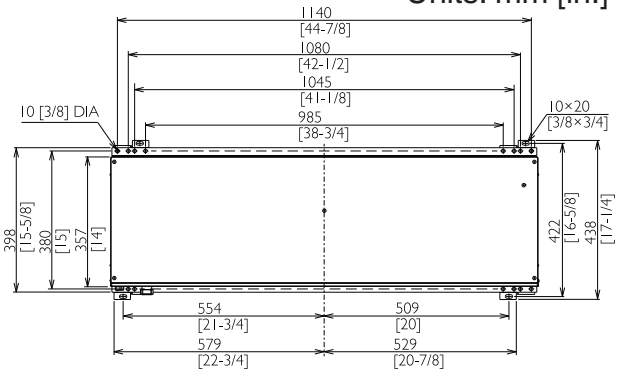

Rear

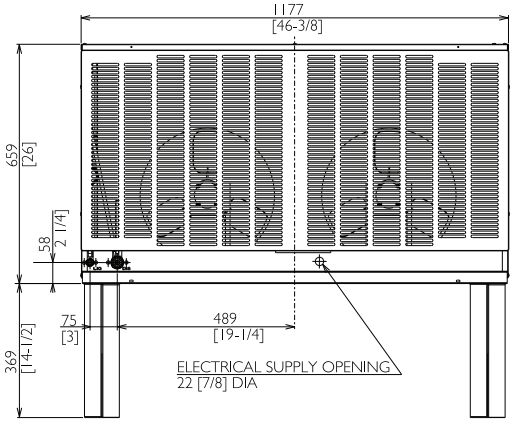

Icemaker Model	URC Model	Heat of Rejection AT 90°F (32°C) WT 70°F (21°C)
KM-1601SRH	URC-22F	21,000 BTU/hr
KM-1601SRH3	URC-22F	26,400 BTU/hr
KM-1900SRH	URC-22F	26,500 BTU/hr
KM-1900SRH3	URC-22F	25,700 BTU/hr
KM-2100SRH3	URC-22F	30,400 BTU/hr
KM-2500SRH3	URC-23F	40,600 BTU/hr

II. Installation and Operating Instructions

⚠ WARNING

- The appliance must be installed in accordance with applicable national, state, and local codes and regulations.
- Failure to install, operate, and maintain the appliance in accordance with this manual will adversely affect safety, performance, component life, and warranty coverage and may result in costly water damage.
- **CHOKING HAZARD:** Ensure all components, fasteners, and thumbscrews are securely in place after installation. Make sure that none have fallen into the dispenser unit/ice storage bin.

A. Location

NOTICE

- The icemaker is not intended for outdoor use. Normal operating ambient temperature must be within 45°F to 100°F (7°C to 38°C); Normal operating water temperature must be within 45°F to 90°F (7°C to 32°C). Operation of the icemaker, for extended periods, outside of these normal temperature ranges may affect icemaker performance.
- The icemaker will not work at sub-freezing temperatures. To prevent damage to the water supply line, drain the icemaker if the air temperature is going to go below 32°F (0°C). See "IV. Preparing the Icemaker for Periods of Non-Use."

- The icemaker should not be located next to ovens, grills, or other high heat producing equipment.
- For all models except KM-1601SAH/3, allow 6" (15 cm) clearance at rear, sides, and top for proper air circulation and ease of maintenance and/or service should they be required. For KM-1601SAH/3, allow 9" (23 cm) clearance at rear, sides, and top.
- The location should provide a firm and level foundation for the appliance.

B. Checks Before Installation

- Visually inspect the exterior of the shipping container and immediately report any damage to the carrier. Upon opening the container, any concealed damage should also be immediately reported to the carrier.
- Remove the shipping carton, tape, and packing material. If any are left in the appliance, it will not work properly.
- See the nameplate on the rear panel, and check that your voltage supplied corresponds with the voltage specified on the nameplate.
- Remove the panels to prevent damage when installing the appliance. See "II.C. How to Remove Panels."
- Remove the package containing the accessories.

- Remove the protective plastic film from the panels. If the appliance is exposed to the sun or to heat, remove the film after the appliance cools.
- Check that the refrigerant lines do not rub or touch lines or other surfaces, and that the fan blade (if applicable) turns freely.
- Check that the compressor is snug on all mounting pads.
- The icemaker can be installed on a dispenser unit or ice storage bin. The ice storage bins listed below are recommended.

Model Number	Bin Width	Recommended Hoshizaki Ice Storage Bin
KM-1301S_H/3 KM-1601S_H/3 KM-1900S_H/3 KM-2100S_H3 KM-2500S_H3	48" or Wider	B-800 Series

For further options, contact your local Hoshizaki distributor.

- ***NOTICE!*** **Remote models must be connected to an appropriate remote condenser unit. The remote condenser units listed below are recommended. Connection to a different remote condenser unit will void the warranty unless Hoshizaki approves a different remote condenser unit for your specific application. For further details, contact your local Hoshizaki distributor.**

Model Number	Recommended Hoshizaki Remote Condenser Unit
KM-1301SRH/3	URC-14F
KM-1601SRH/3 KM-1900SRH/3 KM-2100SRH3	URC-22F
KM-2500SRH3	URC-23F

C. How to Remove Panels

See Fig. 1

- Front Panel: Remove the screws. Lift up and pull towards you.
- Top Panel: Remove the screws, then lift off.
- Right Side Panel: Remove the screw. Slide forward slightly and lift off.
- Insulation Panel: Remove the thumbscrew. Lift up slightly and pull towards you.
- Top Insulation: Lift off.
- Spacer: Lift off.

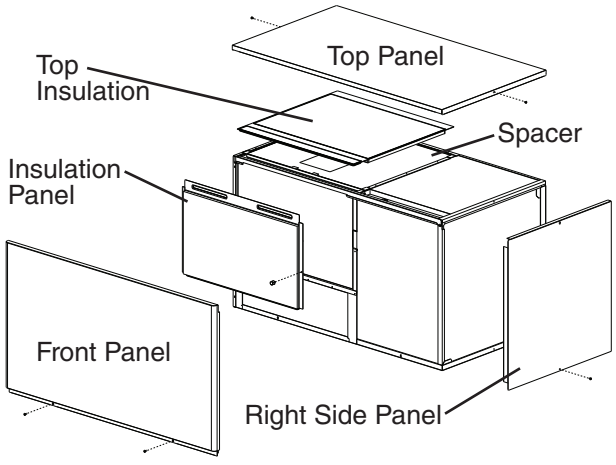

Fig. 1

D. Setup

1. Dispenser Unit/Ice Storage Bin and Icemaker Setup

⚠ WARNING

The installer must ensure the dispenser unit/ice storage bin is compatible with the icemaker, and the dispenser unit/ice storage bin and icemaker are properly attached and secured.

1a) **Dispenser Unit:** Follow the dispenser unit's setup procedure.

1b) **Ice Storage Bin:** Unpack the ice storage bin and attach the 4 adjustable legs provided (bin accessory) to the bottom of the ice storage bin.

2) Position the dispenser unit/ice storage bin in its permanent location.

3) If required, install an adapter kit or top kit. Contact your local Hoshizaki distributor for recommendations.

4) Level the dispenser unit/ice storage bin in both the left-to-right and front-to-rear directions. If using an ice storage bin, adjust the ice storage bin legs to level.

5) Place the icemaker on top of the dispenser unit/ice storage bin.

6a) **Dispenser Unit:** Follow the dispenser unit, adapter kit, or top kit instructions for securing the icemaker. If no instructions are available, secure the icemaker using the mounting brackets provided. Rotate the mounting brackets so that they fit flush to the dispenser unit. See Fig. 2a. Secure the mounting brackets to the icemaker with the bolts provided. Secure the mounting brackets to the dispenser unit with self-tapping screws (not provided). ***NOTICE!*** **Use care to avoid damage to dispenser unit components when attaching the mounting brackets.**

6b) **Ice Storage Bin:** Follow the ice storage bin, adapter kit, or top kit instructions for securing the icemaker. If no instructions are available, secure the icemaker using the 2 mounting brackets and the bolts provided. See Fig. 2b.

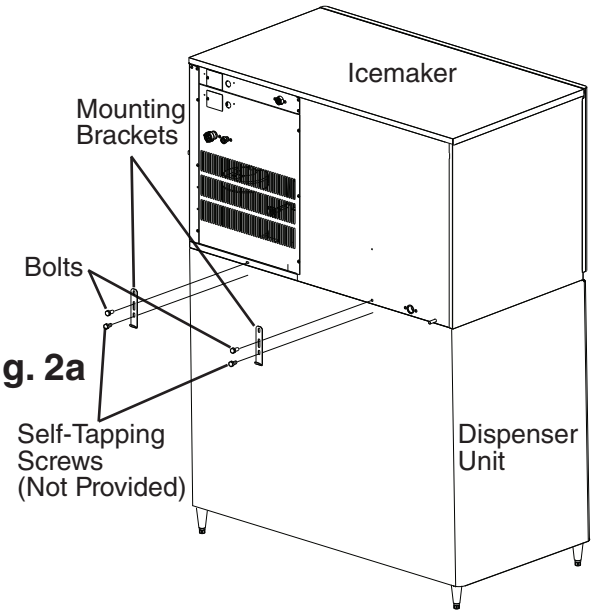

Fig. 2a

Model Shown: KM-1301SRH

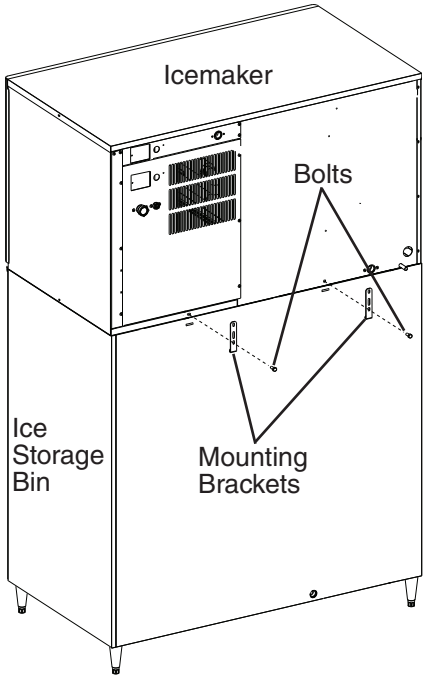

Fig. 2b

Model Shown: KM-1601SRH

2. Bin Control Installation

NOTICE
Before operating the icemaker, the bin control must be installed. Failure to properly install the bin control could result in ice backup and icemaker damage.

1) Remove the baffle from the storage bin.

2) Remove the thumbscrew and bin control assembly from inside the icemaker. See Fig. 3.

3) Use the thumbscrew removed in the previous step and the thumbscrew included in the accessory bag to secure the bin control assembly to the bottom of the icemaker. See Fig. 4.

4) Remove the bin control cable bracket from inside the icemaker, then route the bin control cable through the hole in the bottom of the icemaker and the bushing in the bin control cable bracket. Secure the bin control cable bracket. Leave as little slack as possible inside the storage bin. Route the cable through the wire saddles.

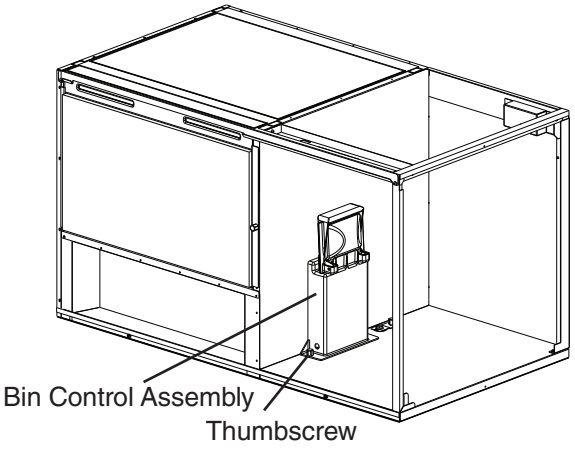

Fig. 3

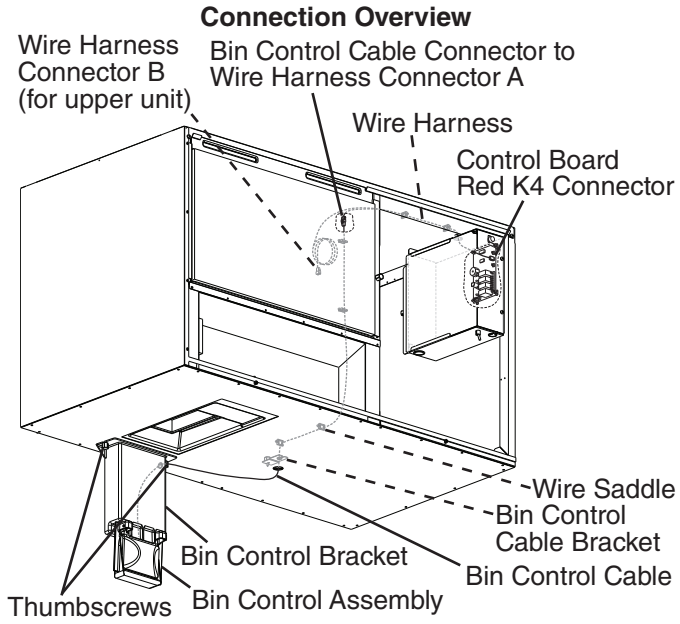

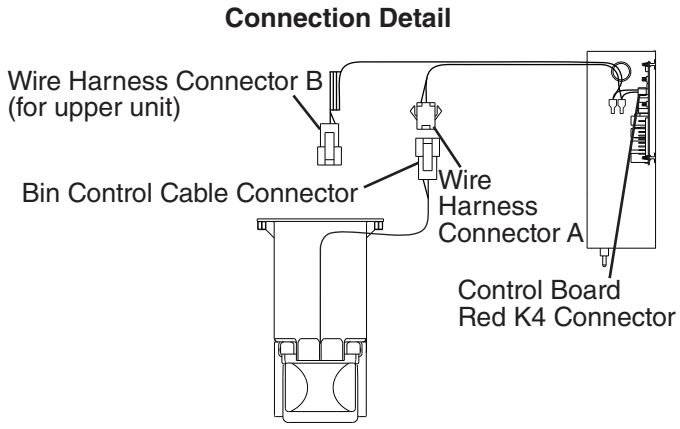

Fig. 4

5) Connect the bin control cable connector to wire harness connector A coming from the control box.

Note:

- Wire harness has one connector (connector A) to plug into the bin control cable and another connector (connector B) for use if an upper unit is installed.
- Wire harness is connected to the control board red K4 connector.

6) Make sure the bin control cable and wire harness are secured in the wire saddles and do not interfere with any components.

7) Replace the panels and storage bin baffle in their correct positions unless you are installing an upper unit. If installing an upper unit, see "II.D.3. Installation of Upper Unit."

3. Installation of Upper Unit

1) See "II.D.1. Dispenser Unit/Ice Storage Bin and Icemaker Setup" and "II.D.2. Bin Control Installation" for the lower unit installation.

2) Remove the top panel and the top insulation of the lower unit. The top panel and the top insulation of the lower unit are not required when installing an upper unit.

3) Unpack the upper unit and remove the shipping carton, tape, and packing material.

4) Remove the panels of the upper unit.

5) Stack the upper unit on top of the lower unit.

6) Secure the upper unit to the lower unit using the 2 mounting brackets and the bolts provided. See Fig. 5.

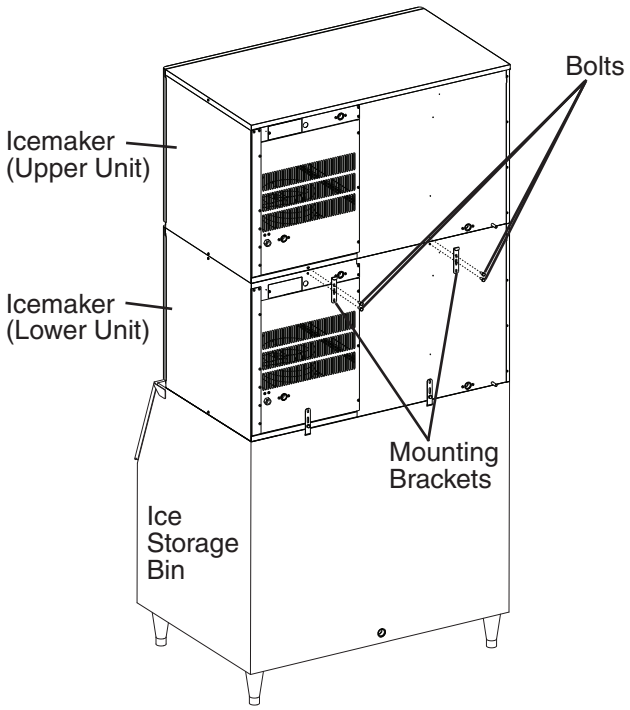

Fig. 5

7) Remove the bin control cable bracket from inside the upper unit. See Fig. 6. Leave the upper unit's bin control assembly in its original position. It will not be used.

8) Route lower unit wire harness connector B through the hole in the bottom of the upper unit. Route the wiring through the bushing in the bin control cable bracket, then through the wire saddles.

9) Connect lower unit wire harness connector B to upper unit wire harness connector A.

10) Make sure the wire harnesses are secured in the wire saddles and do not interfere with any components.

11) Secure the bin control cable bracket.

12) Replace the panels and storage bin baffle in their correct positions.

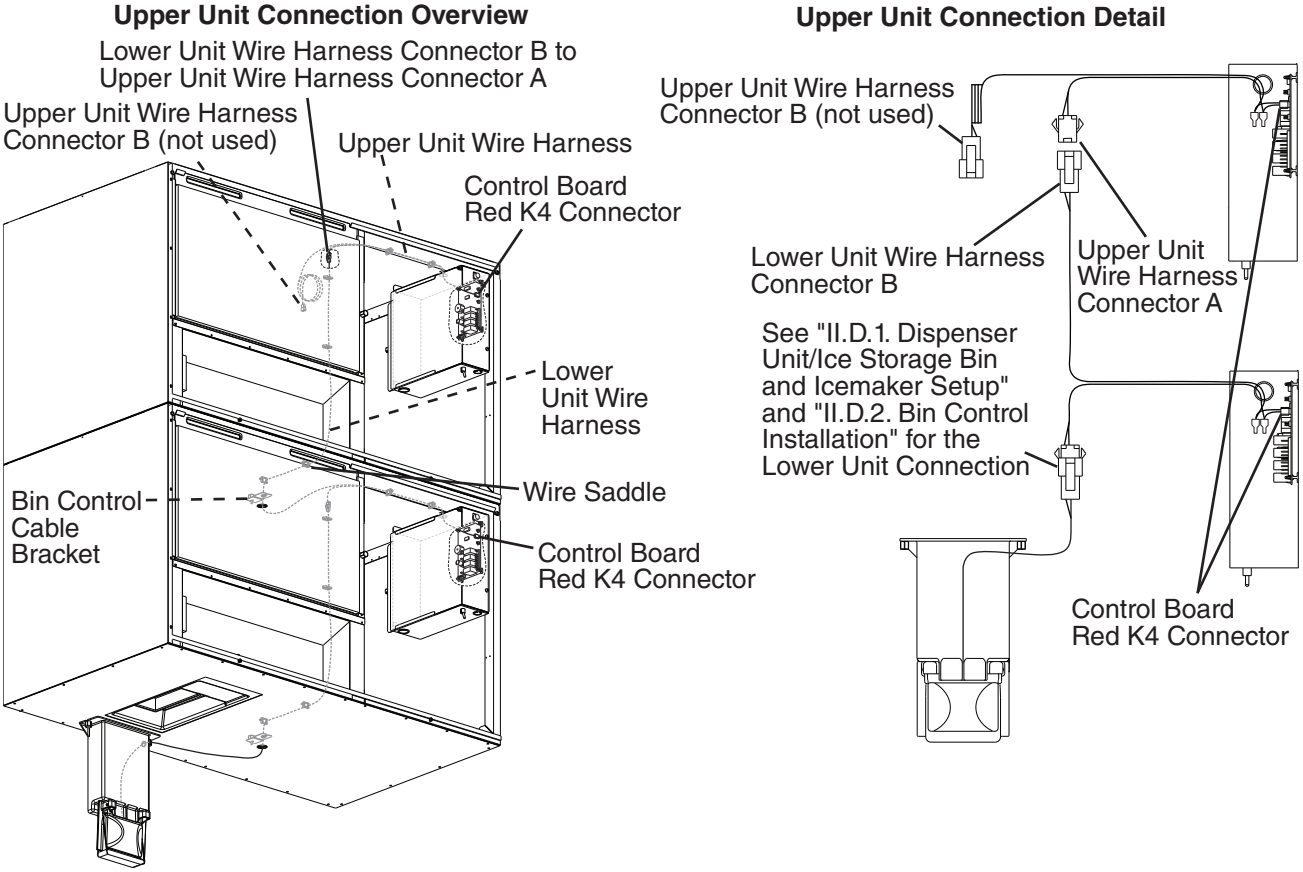

Fig. 6

E. Electrical Connection

⚠ WARNING

For All Models

- Electrical connection must be hard-wired and must meet national, state, and local electrical code requirements. Failure to meet these code requirements could result in death, electric shock, serious injury, fire, or damage.
- The icemaker requires an independent power supply of proper capacity. See the nameplate for electrical specifications. Failure to use an independent power supply of proper capacity can result in a tripped breaker, blown fuse, damage to existing wiring, or component failure. This could lead to heat generation or fire.
- **THE ICEMAKER MUST BE GROUNDED.** Failure to properly ground the icemaker could result in death or serious injury.
- Electrical connection must be made in accordance with the instructions on the "WARNING" tag, provided with the pig tail leads in the junction box. See Fig. 7.

Additional Warnings for Remote Models

- **THE REMOTE CONDENSER UNIT MUST BE GROUNDED.** Power supply and ground connection to the remote condenser unit are supplied from the icemaker. See "II.G.6. Electrical Connection." Failure to properly ground the remote condenser unit could result in death or serious injury.
- To reduce the risk of electric shock, make all remote condenser unit connections before connecting the icemaker power supply.

NOTICE

On remote models, the appliance must have power for a minimum of 4 hours prior to startup to prevent compressor damage.

- Usually an electrical permit and services of a licensed electrician are required.
- The maximum allowable voltage variation is ±10 percent of the nameplate rating.
- ***NOTICE!*** **On single phase KM-1301S_H models, the main transformer's voltage tap switch must be positioned to match incoming voltage at startup.**
- ***NOTICE!*** **On single phase KM-1601S_H and KM-1900S_H models, the white lead must be connected to the neutral conductor of the power source. Miswiring may result in severe damage to the icemaker.**
- ***NOTICE!*** **On three phase models, the main transformer's voltage tap switch must be positioned to match incoming voltage at startup.**
- ***NOTICE!*** **On three phase models, connect the highest incoming voltage supply ("stinger leg") to the power wire dedicated to the compressor. See the wiring label on the icemaker.**
- The opening for the power supply connection is 7/8" DIA to fit a 1/2" trade size conduit.

KM-1301S_H

⚠WARNING

ELECTRICAL CONNECTION

THIS UNIT MUST BE GROUNDED
Failure to properly ground or wire this unit could result in death, serious injury, or severe damage to the icemaker.
The transformer's voltage tap switch must be positioned to match incoming voltage at startup.
See diagram below.

208-230/60/1

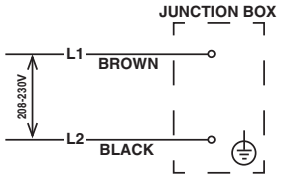

KM-1601S_H
KM-1900S_H

⚠WARNING

ELECTRICAL CONNECTION

THIS UNIT MUST BE GROUNDED
Failure to properly ground or wire this unit could result in death, serious injury, or severe damage to the icemaker. The white lead must be connected to the neutral conductor of the power source.
See diagram below.

208-230/60/1
(3 wire with neutral for 115V)

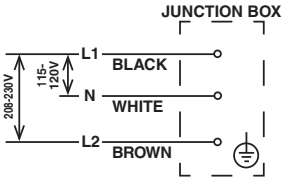

KM-1301S_H3
KM-1601S_H3
KM-1900S_H3
KM-2100S_H3
KM-2500S_H3

⚠WARNING

ELECTRICAL CONNECTION

THIS UNIT MUST BE GROUNDED
Failure to properly ground or wire this unit could result in death, serious injury, or severe damage to the icemaker.
This unit must be connected to a three-phase power source.
The transformer's voltage tap switch must be positioned to match incoming voltage at startup.
See diagram below.

208-230/60/3

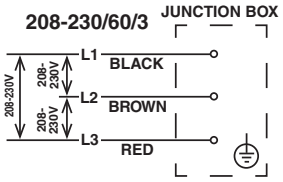

Fig. 7

F. Water Supply and Drain Connections
See Figs. 8 through 10

⚠ WARNING

Water supply and drain connections must be installed in accordance with applicable national, state, and local regulations.

NOTICE

- Normal operating water temperature should be within 45°F to 90°F (7°C to 32°C). Operation of the appliance, for extended periods, outside of this normal temperature range may affect appliance performance.
- Water supply pressure must be a minimum of 10 PSIG and a maximum of 113 PSIG. If the pressure exceeds 113 PSIG, the use of a pressure reducing valve is required.
- To prevent damage to the appliance, do not operate the appliance when the water supply is off, or if the pressure is below 10 PSIG. Do not run the appliance until the proper water pressure is reached.
- External filters, strainers, or softeners may be required depending on water quality. Contact your local Hoshizaki Certified Service Representative or local Hoshizaki distributor for recommendations.

- A plumbing permit and services of a licensed plumber may be required in some areas.
- The icemaker drain line, dispenser unit/ice storage bin drain line, and water-cooled condenser drain line (if applicable) must be run separately. The condensation drain line can be connected to the icemaker drain line or can be run separately.
- Drain lines must have 1/4" fall per foot (2 cm per 1 m) on horizontal runs to get a good flow. A vented tee connection is also required for proper flow.
- Drain lines should not be piped directly to the sewer system. An air gap of a minimum of 2 vertical inches (5 cm) should be between the end of the drain pipes from the icemaker and condensation drain, dispenser unit/ice storage bin, and water-cooled condenser (if applicable) and the floor drain.

1. Icemaker

Icemaker Water Supply Inlet	Minimum Icemaker Water Supply Line Size	Icemaker Drain Outlet	Minimum Icemaker Drain Line Size	Condensation Drain Outlet
1/2" Female Pipe Thread (FPT)	3/8" Nominal ID Copper Water Tubing or Equivalent	3/4" Female Pipe Thread (FPT)	3/4" Nominal ID Hard Pipe or Equivalent	3/8" OD Hard Tube

- An icemaker water supply line shut-off valve and drain valve must be installed.
- Be sure there is sufficient extra water supply line and drain line for the appliance to be pulled out for service.

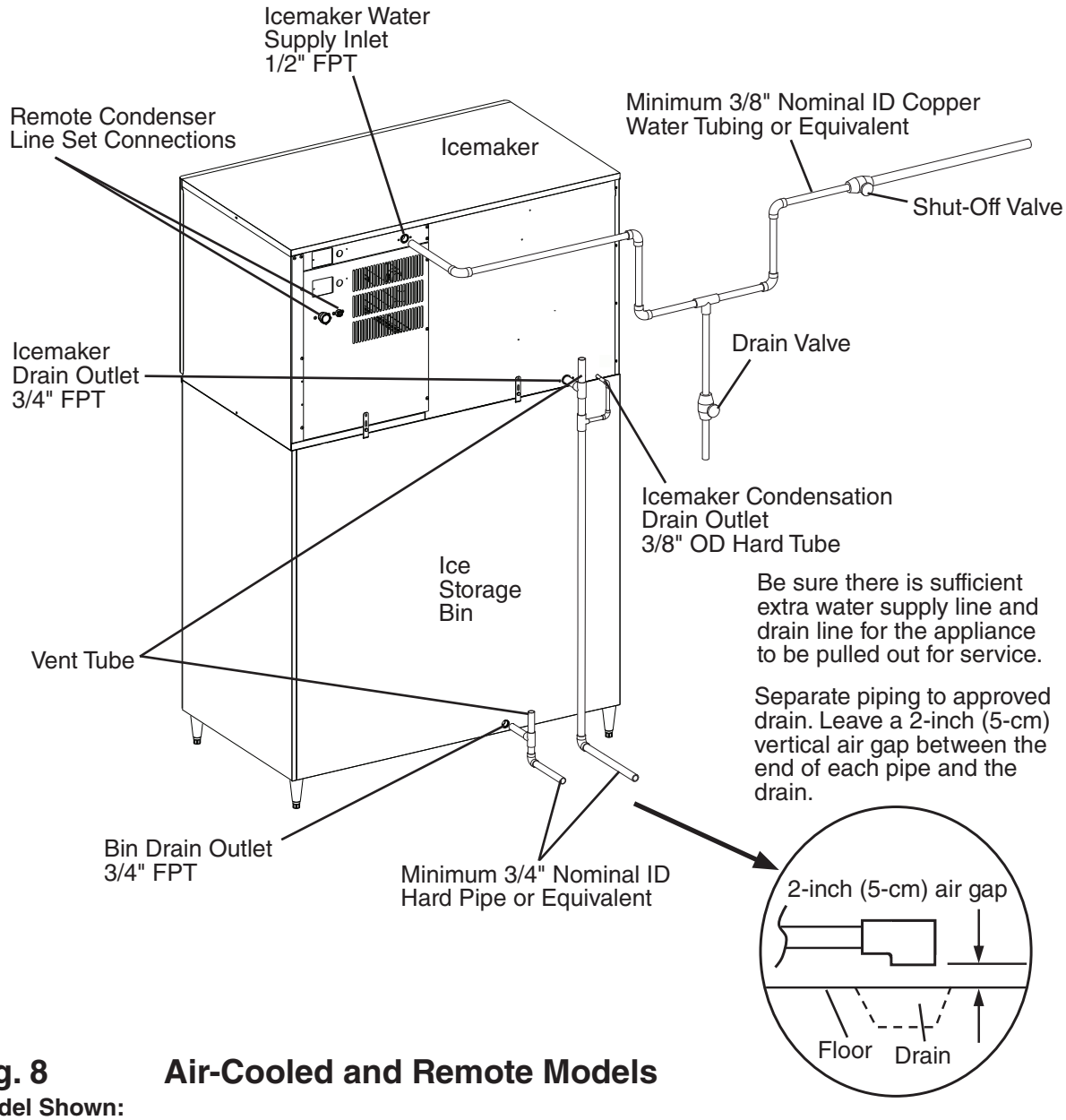

Fig. 8 Air-Cooled and Remote Models

Model Shown:
KM-1601SRH

2. Water-Cooled Condenser

a) Connection to an Open Drain System

Condenser Water Supply Inlet	Minimum Condenser Water Supply Line Size	Condenser Drain Outlet	Minimum Condenser Drain Line Size
1/2" Female Pipe Thread (FPT)	3/8" Nominal ID Copper Water Tubing or Equivalent	3/8" Female Pipe Thread (FPT)	3/8" Nominal ID Hard Pipe or Equivalent

- A condenser water supply line shut-off valve and drain valve must be installed.
- In some areas, a back flow preventer may be required in the cooling water circuit.
- In order to maintain the proper high side pressure, the condenser water supply inlet temperature should not drop below 45°F (7°C) and the condenser drain outlet temperature must be in the 104°F to 115°F (40°C to 46°C) range. Once the icemaker installation is complete, confirm the condenser drain outlet temperature 5 minutes after a freeze cycle starts. If the condenser drain outlet temperature is not in the proper range, use a flat blade screwdriver to rotate the adjustment screw on the water-regulating valve until the temperature is in the proper range (rotate counterclockwise to raise temperature or clockwise to lower temperature).

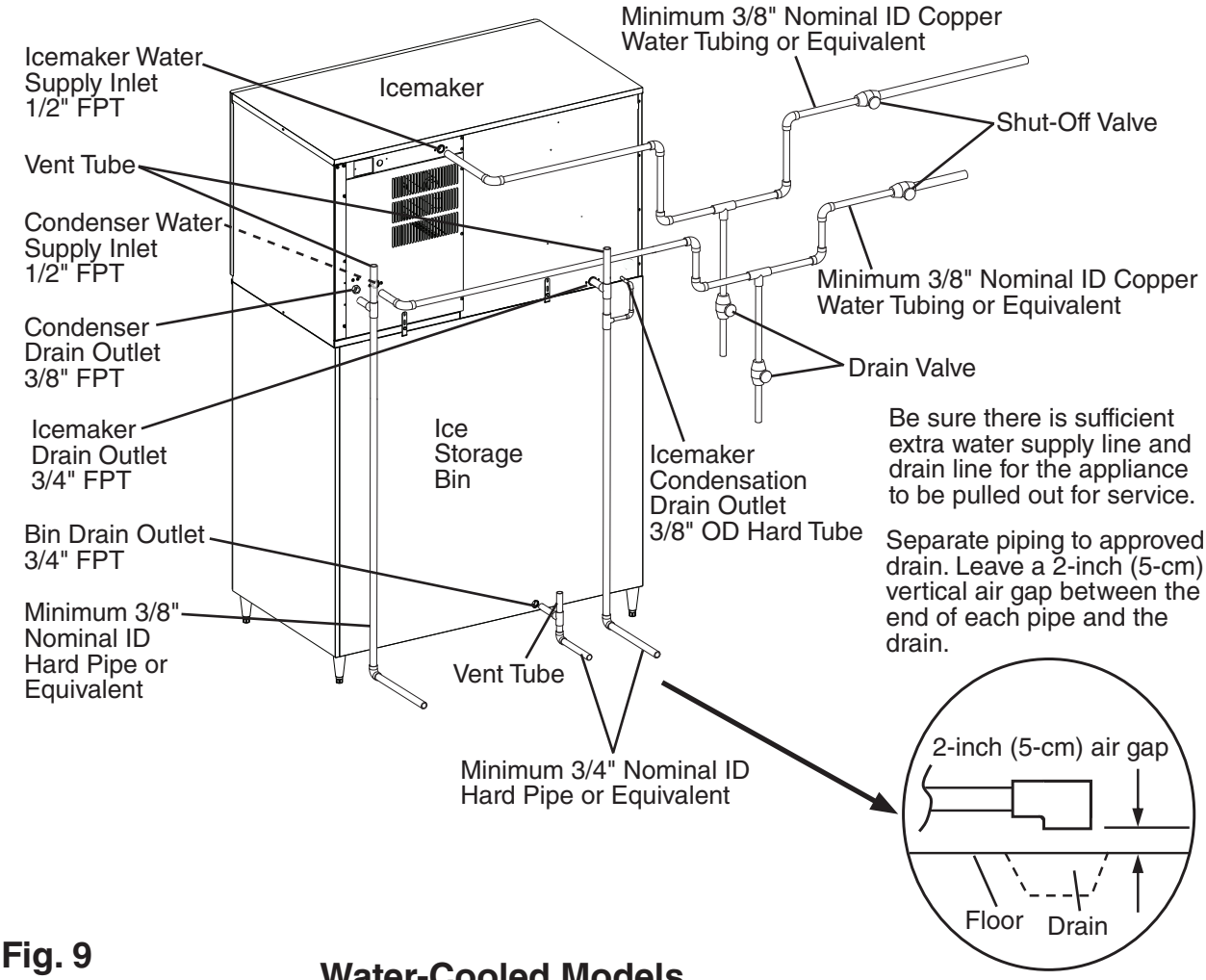

Fig. 9
Model Shown:
KM-1601SWH

Water-Cooled Models
Connection to an Open Drain System

b) Connection to a Closed Loop System

Condenser Water Supply Inlet	Minimum Condenser Water Supply Line Size	Condenser Return Outlet	Minimum Condenser Return Line Size
1/2" Female Pipe Thread (FPT)	3/8" Nominal ID Copper Water Tubing or Equivalent	3/8" Female Pipe Thread (FPT)	3/8" Nominal ID Copper Water Tubing or Equivalent

- Shut-off valves and drain valves must be installed at both the condenser water supply inlet and condenser return outlet.
- Minimum water flow to the condenser is 4 GPM.
- The pressure differential between the condenser water supply inlet and condenser return outlet must be no less than 10 PSIG.
- When using a glycol blend, the solution mixture should be less than 30% glycol.
- In order to maintain the proper high side pressure, the condenser water supply inlet temperature should not drop below 45°F (7°C) and the condenser return outlet temperature must be in the 104°F to 115°F (40°C to 46°C) range. Once the icemaker installation is complete, confirm the condenser return outlet temperature 5 minutes after a freeze cycle starts. If the condenser return outlet temperature is not in the proper range, use a flat blade screwdriver to rotate the adjustment screw on the water-regulating valve until the temperature is in the proper range (rotate counterclockwise to raise temperature or clockwise to lower temperature).

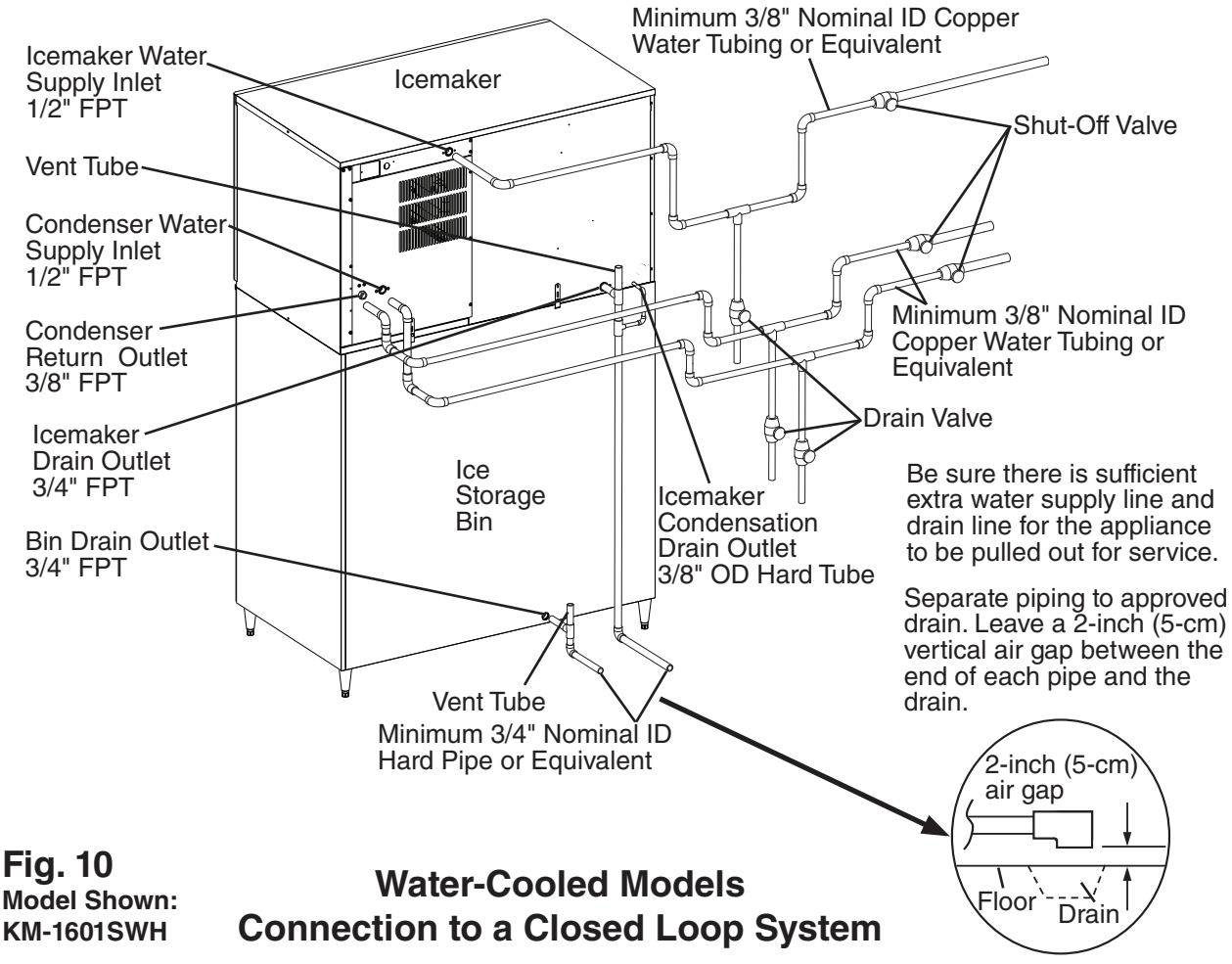

Fig. 10
Model Shown:
KM-1601SWH

Water-Cooled Models
Connection to a Closed Loop System

G. Installation of Remote Condenser Unit

⚠ WARNING

- Installation of remote condenser unit must be performed by properly trained and EPA-certified service personnel.
- The remote condenser unit must be installed in accordance with applicable national, state, and local codes and regulations.
- Failure to install the remote condenser unit within these guidelines may adversely affect safety, performance, component life, and warranty coverage.
- Power supply and ground wire to the remote condenser unit are supplied from the icemaker. For details, see section "II.G.6. Electrical Connection."

1. Location

NOTICE

- The remote condenser unit is intended for outdoor use. Normal operating ambient temperature must be within -20°F to +122°F (-29°C to +50°C). Operation of the remote condenser unit, for extended periods, outside of this normal temperature range may affect appliance performance.
- The maximum line length for the standard line sizes and refrigerant charge is 66' (20 m). With larger line sizes and/or additional refrigerant, the maximum line length is 100' (30.5 m). For details, see "II.G.4 Line Set Size and Refrigerant Charge."
- The maximum vertical distance between the remote condenser unit and the icemaker is 33' (10 m) above or 10' (3 m) below the icemaker. These distances are measured fitting to fitting. See Fig. 11.

The remote condenser unit must be positioned in a permanent site under the following guidelines:

- A firm and flat site.
- A dry and well ventilated area with 24" (61 cm) clearance at front and rear for proper air circulation and ease of maintenance and/or service should they be required. See Fig. 12.

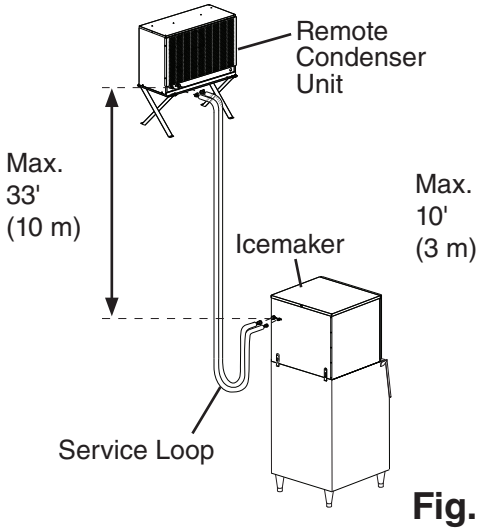

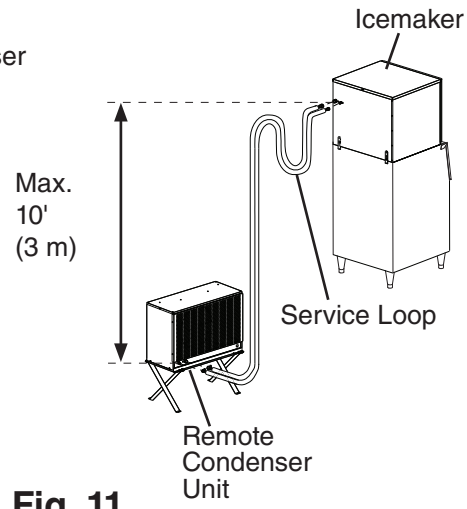

Fig. 11

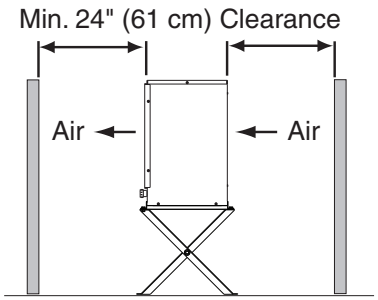

Fig. 12

2. Checks Before Installation

1) Remove the shipping carton, tape, and packing material.

2) Check that the refrigerant lines do not rub or touch lines or other surfaces, and that the fan blades move freely.

3. Setup

1) Assemble 2 sets of legs using the legs, bolts, and nuts provided. See Fig. 13.

2) Position 1 of the plates provided between a set of legs and the remote condenser unit, then secure the legs to the remote condenser unit with the bolts and nuts provided. Repeat on the other side with the remaining set of legs.

3) The bottom of each leg has a mounting hole. Secure the legs to the permanent site with 4 bolts (not included).

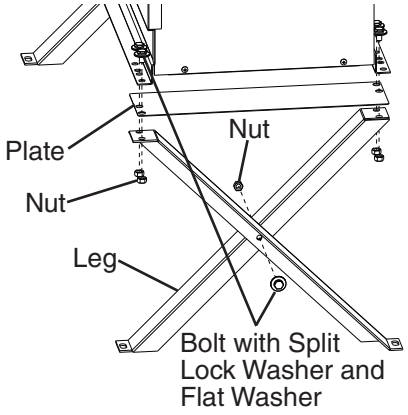

Fig. 13

4. Line Set Size and Refrigerant Charge

NOTICE

The icemaker, line set, and remote condenser unit must contain the same type of refrigerant. Mixing of refrigerants will result in improper operation and possible damage to the refrigeration system.

Line Set Size and Refrigerant Charge

Hoshizaki Icemaker	Hoshizaki Remote Condenser Unit	Line Set Up to 66' (20 m)			Line Set Greater than 66' (20 m) Maximum 100' (30.5 m)		
		Liquid Line	Discharge Line	Charge Adjustment	Liquid Line	Discharge Line	Charge Adjustment (R-404A)
KM-1301SRH/3	URC-14F	3/8" OD	1/2" OD	Not Applicable	3/8" OD	1/2" OD	Add 0.4 oz. for each foot over 66' (40 g for each meter over 20 m). Write new total charge on icemaker's rating label.
KM-1601SRH/3 KM-1900SRH/3 KM-2100SRH3	URC-22F	3/8" OD	5/8" OD	Not Applicable	3/8" OD	5/8" OD	Add 0.4 oz. for each foot over 66' (40 g for each meter over 20 m). Write new total charge on icemaker's rating label.
KM-2500SRH3	URC-23F						

5. Line Set Installation

Precharged factory line sets, available as optional equipment from Hoshizaki America, are recommended. For details, see "II.G.5.a) Factory Line Set Installation." Field fabricated line sets are allowed. For details, see "II.G.5.b) Field Fabricated Line Set Installation."

a) Factory Line Set Installation

1) Route the factory line set (see "II.G.4 Line Set Size and Refrigerant Charge" for details) from the remote condenser unit to the icemaker. Leave a service loop behind the icemaker to allow the icemaker to be pulled out for service. See Fig. 14. Factory fabricated line sets are precharged and do not need to be evacuated. If the line set is too long or too short, see "II.G.5.a)(1) Factory Line Set Modification."

NOTICE
• Ensure that there are no traps and no kinks in the line set. The service loop is not considered an oil trap. • Do not coil extra line set.

2) Connect the refrigerant lines to the appropriate male fittings on the remote condenser unit first and then at the icemaker. Make a proper connection as follows:
   a. Remove the protective covers from the male fitting and female coupling.
   b. Apply Polyol Ester (POE) refrigerant oil or Parker Super O Lube to the entire male fitting, including O-ring, diaphragm, and threads before making the connection. See Fig. 15. ***NOTICE!*** **Do not use thread sealant on the fittings. Use POE refrigerant oil or Parker Super O Lube only. Couplings are one-time use only.**
   c. Make sure the male fitting and female coupling are properly aligned, then start the connection by hand to ensure that it is not cross threaded.
   d. Place a backup wrench on the back of the female coupling, then tighten the connection with a wrench until it is tight. At this point, the nut has covered most of the threads on the male fitting. ***NOTICE!*** **Failure to use a backup wrench may result in damage to the line set and possible refrigerant leaks.**
   e. Mark a reference line on the female coupling and the remote condenser unit or icemaker panel. Using a backup wrench on the back of the female coupling, tighten the six-sided nut of the female coupling an additional 1/6 turn. See Fig. 16. ***NOTICE!*** **Confirm connection is free of leaks.**

3) If you lengthened the line set as outlined in "II.G.5.a)(1) Factory Line Set Modification" and it exceeds 66' (20 m), see "II.G.4. Line Set Size and Refrigerant Charge" for proper charging of the appliance.

(1) Factory Line Set Modification

1) Recover the line set charge through the Schrader access ports on the Parker quick connect couplings and store it in an approved container. Do not discharge the refrigerant into the atmosphere. Remove the extra line set length or add extra tubing. When adding extra tubing, insulate the additional copper tubes separately.

2) Use an electronic leak detector or soap bubbles to check for leaks. Add a trace of refrigerant to the lines through the Schrader access ports on the Parker quick connect couplings (if using an electronic leak detector), and then raise the pressure using nitrogen gas (140 PSIG). **WARNING! Do not use R-404A as a mixture with pressurized air for leak testing.**

3) Evacuate through the Schrader access ports on the Parker quick connect couplings and charge with R-404A refrigerant vapor to a pressure of 15 to 30 PSIG. Go to step 2 in "II.G.5.a) Factory Line Set Installation."

b) Field Fabricated Line Set Installation

1) Route the copper tube liquid line and copper tube discharge line (see "II.G.4 Line Set Size and Refrigerant Charge" for details) from the remote condenser unit to the icemaker. Leave a service loop behind the icemaker to allow the icemaker to be pulled out for service. See Fig. 14.

NOTICE
• Ensure that there are no traps and no kinks in the line set. The service loop is not considered an oil trap. • Do not coil extra line set. Fabricate the line set to the proper length.

2) Insulate the two copper tubes separately.

3) Install Parker quick connect couplings on each end. OS-QUICK, a universal quick connect coupling kit available as optional equipment from Hoshizaki America, is recommended. ***NOTICE!*** **Before brazing, remove the Schrader valve core from the access port. When brazing, protect the coupling by using a wet cloth to prevent the coupling from overheating. Do not use silver alloy or copper alloy containing arsenic.**

4) Allow the coupling to cool, then replace the Schrader valve core.

5) Use an electronic leak detector or soap bubbles to check for leaks. Add a trace of refrigerant to the lines through the Schrader access ports on the Parker quick connect couplings (if using an electronic leak detector), and then raise the pressure using nitrogen gas (140 PSIG). **WARNING! Do not use R-404A as a mixture with pressurized air for leak testing.**

6) Evacuate through the Schrader access ports on the Parker quick connect couplings and charge with R-404A refrigerant vapor to a pressure of 15 to 30 PSIG.

7) Connect the refrigerant lines to the appropriate male fittings on the remote condenser unit first and then at the icemaker. Make a proper connection as follows:
   a. Remove the protective covers from the male fitting and female coupling.
   b. Apply Polyol Ester (POE) refrigerant oil or Parker Super O Lube to the entire male fitting, including O-ring, diaphragm, and threads, before making the connection. See Fig. 15. ***NOTICE!*** **Do not use thread sealant on the fittings. Use POE refrigerant oil or Parker Super O Lube only. Couplings are one-time use only.**
   c. Make sure the male fitting and female coupling are properly aligned, then start the connection by hand to ensure that it is not cross threaded.
   d. Place a backup wrench on the back of the female coupling, then tighten the connection with a wrench until it is tight. At this point, the nut has covered most of the threads on the male fitting. ***NOTICE!*** **Failure to use a backup wrench may result in damage to the line set and possible refrigerant leaks.**
   e. Mark a reference line on the female coupling and the remote condenser unit or icemaker panel. Using a backup wrench on the back of the female coupling, tighten the six-sided nut of the female coupling an additional 1/6 turn. See Fig. 16. ***NOTICE!*** **Confirm connection is free of leaks.**

8) If the line set exceeds 66' (20 m), see "II.G.4. Line Set Size and Refrigerant Charge" for proper charging of the appliance.

Fig. 14

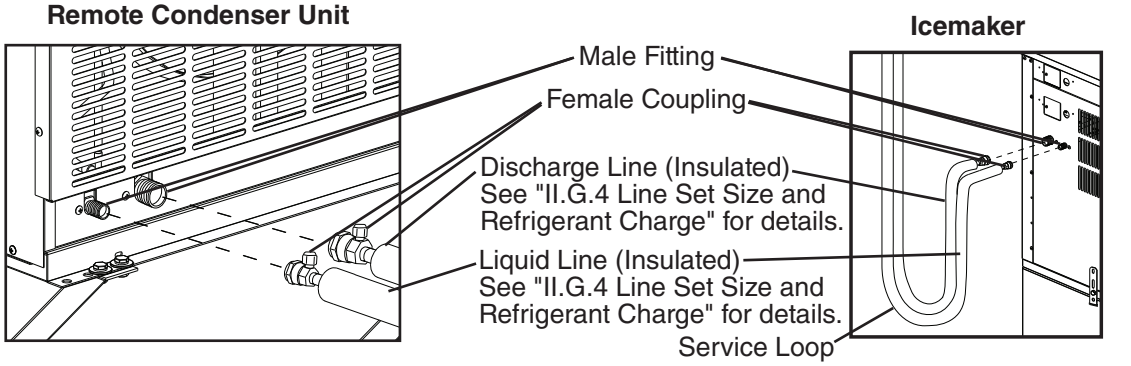

Fig. 15

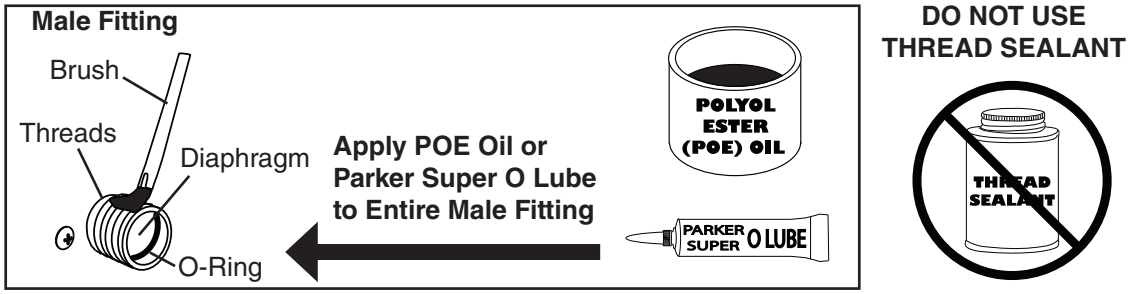

Fig. 16

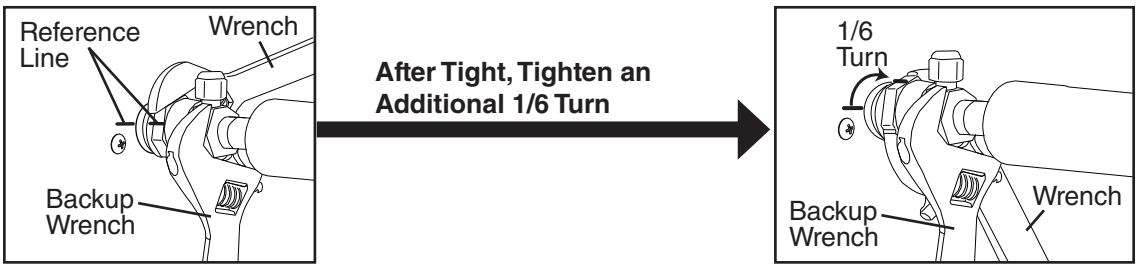

6. Electrical Connection

⚠ WARNING

- Electrical connection must meet national, state, and local electrical code requirements. Failure to meet these code requirements could result in death, electric shock, serious injury, fire, or damage.
- To reduce the risk of electric shock, make all remote condenser unit connections before connecting the icemaker power supply.
- **THE REMOTE CONDENSER UNIT MUST BE GROUNDED.** Install a ground wire from the icemaker fan motor junction box to the remote condenser unit junction box. Use wire of an appropriate gage and outdoor rating. Failure to properly ground the remote condenser unit could result in death or serious injury.
- Install line and neutral wires from the fan motor leads in the icemaker fan motor junction box to the leads in the remote condenser unit junction box. Use wire of an appropriate gage and outdoor rating.
- Do not connect the fan motor leads in the icemaker to incoming power source. Do not connect the fan motor leads in the icemaker together. Do not allow the leads to contact the junction box walls.
- Do not connect the remote condenser unit to an external power source.

NOTICE

On remote models, the appliance must have power for a minimum of 4 hours prior to startup to prevent compressor damage.

- Usually an electrical permit and services of a licensed electrician are required.
- The opening for the power supply connection is 7/8" DIA to fit a 1/2" trade size conduit.

1) Remove the remote condenser unit louver panel. See Fig. 17.

2) Remove the icemaker fan motor junction box cover. Remove the remote condenser unit junction box cover.

Fig. 17

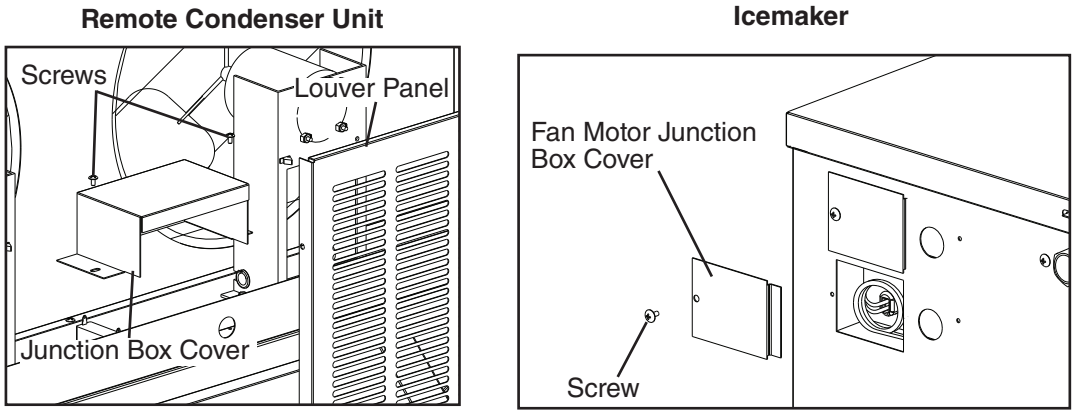

3) Install a ground wire from the icemaker fan motor junction box to the remote condenser unit junction box. Use wire of an appropriate gage and outdoor rating.

4) Install line and neutral wires from the fan motor leads in the icemaker fan motor junction box to the leads in the remote condenser unit junction box. Use wire of an appropriate gage and outdoor rating.

5) Replace the junction box covers and the louver panel in their correct positions.

7. Stacking Remote Condenser Unit

1) Install the lower remote condenser unit as described earlier in this section.

2) Place the upper remote condenser unit on top of the lower remote condenser unit. See Fig. 18.

3) Secure the upper remote condenser unit to the lower remote condenser unit with the 4 screws provided.

4) Install refrigerant lines and make electrical connection as described earlier in this section.

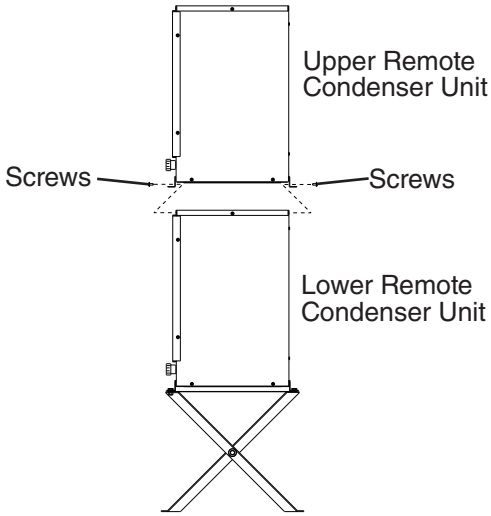

Fig. 18

H. Final Checklist

⚠ WARNING

CHOKING HAZARD: Ensure all components, fasteners, and thumbscrews are securely in place after installation. Make sure that none have fallen into the dispenser unit/ice storage bin.

1) Is the icemaker level?
2) Is the icemaker in a site where the ambient temperature is within 45°F to 100°F (7°C to 38°C) and the water temperature within 45°F to 90°F (7°C to 32°C) all year around?
3) All models except KM-1601SAH/3: Is there at least 6" (15 cm) clearance at rear, sides, and top of the icemaker? KM-1601SAH/3: Is there at least 9" (23 cm) clearance at rear, sides, and top of the icemaker?
4) Have the shipping carton, tape, and packing material been removed from the appliance? Is the cube guide in the correct position? Are the separators between the evaporator banks properly attached to their holding clips?
5) Have all electrical and water connections been made? Do electrical and water connections meet applicable national, state, and local code and regulation requirements?
6) Has the power supply voltage been checked or tested against the nameplate rating? Has a proper ground been installed to the icemaker? On remote models, has a proper ground also been installed to the remote condenser unit? On single phase KM-1301S_H models and on all three phase models, has the main transformer's voltage tap switch been positioned to match incoming voltage?
7) Are the water supply and drain lines sized as specified? Are the water supply line shut-off valve(s) and drain valve(s) installed? Has the water supply pressure been checked to ensure a minimum of 10 PSIG and a maximum of 113 PSIG?
8) Is the compressor snug on all mounting pads? Have the refrigerant lines been checked to make sure they do not rub or touch other lines or surfaces? Have the fan blades (if applicable) been checked to make sure they turn freely?
9) On remote models:
   - Is the line set sized as specified, insulated, tightened, and free of leaks and kinks?
   - If the line set exceeds 66' (20 m), has the charge been adjusted as specified?
   - Has the appliance power supply been on for a minimum of 4 hours?
   - Is the remote condenser unit in a site where the ambient temperature is within -20°F to +122°F (-29°C to +50°C) all year around?
   - Is there at least 24" (61 cm) clearance around the remote condenser unit?
10) Are all components, fasteners, and thumbscrews securely in place?
11) Has the end user been given the instruction manual, and instructed on how to operate the appliance and the importance of the recommended periodic maintenance?
12) Has the end user been given the contact information of an authorized service agent?
13) Has the warranty card been filled out and forwarded to the factory for warranty registration?

I. Startup

⚠ WARNING

All parts are factory-adjusted. Improper adjustments may adversely affect safety, performance, component life, and warranty coverage.

NOTICE

- If the icemaker is turned off, wait for at least 3 minutes before restarting the icemaker to prevent damage to the compressor.
- To prevent damage to the water pump seal, do not leave the control switch in the "WASH" position for extended periods when the water tank is empty.
- At startup, confirm that all internal and external connections are free of leaks.

Additional Notice for Remote Models

- The icemaker must have power for a minimum of 4 hours prior to startup to prevent compressor damage.

1) Open the water supply line shut-off valve(s).
2) Remove the front panel.
3) Move the control switch on the control box to the "ICE" position.
4) Replace the front panel in its correct position.
5) Turn on the power supply, and allow the icemaker to operate for a total of 10 minutes.
6) Turn off the power supply, then remove the front panel.
7) Remove the insulation panel. Remove the drain plug located on the lower front part of the ice chute. See Fig. 19. Allow the water tank to drain.
8) Replace the drain plug, insulation panel, and front panel in their correct positions. Be careful not to cross thread the drain plug.
9) Clean the dispenser unit/ice storage bin liner using a neutral cleaner. Rinse thoroughly after cleaning.
10) Turn on the power supply to start the automatic icemaking process.
11) During the first 5 minutes of the freeze cycle, confirm bin control operation by pressing and holding the bin control's actuator paddle until the icemaker shuts down. The icemaker should shut down in approximately 15 seconds.
12) On water-cooled models, confirm proper condenser drain outlet/return outlet temperature as outlined in "II.F.2. Water-Cooled Condenser."

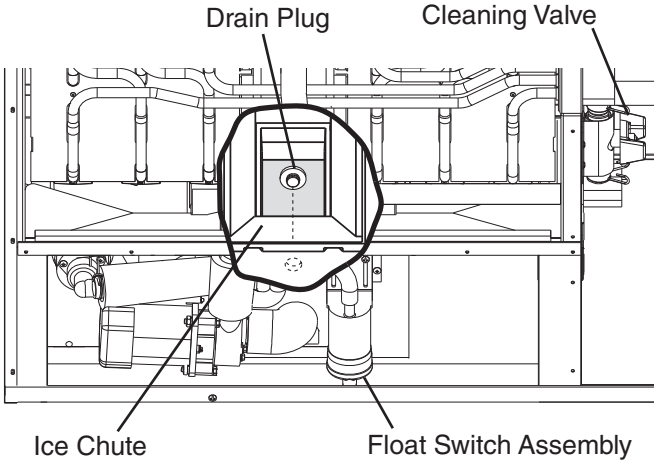

Fig. 19

III. Maintenance

The appliance must be maintained in accordance with the instruction manual and labels provided. Consult with your local Hoshizaki Certified Service Representative about maintenance service.

⚠ WARNING

- Only qualified service technicians should service the appliance.
- To reduce the risk of electric shock, do not touch the control switch with damp hands.
- Move the control switch to the "OFF" position and turn off the power supply before servicing. Lockout/Tagout to prevent the power supply from being turned back on inadvertently.
- **CHOKING HAZARD:** Ensure all components, fasteners, and thumbscrews are securely in place after any maintenance is done to the appliance. Make sure that none have fallen into the dispenser unit/ice storage bin.

A. Maintenance Schedule

The maintenance schedule below is a guideline. More frequent maintenance may be required depending on water quality, the appliance's environment, and local sanitation regulations.

Maintenance Schedule		
Frequency	**Area**	**Task**
Daily	Scoop	Clean the ice scoop using a neutral cleaner. Rinse thoroughly after cleaning.
Bi-Weekly	Air Filters	Inspect. Wash with warm water and neutral cleaner if dirty.
Monthly	External Water Filters	Check for proper pressure and change if necessary.
	Icemaker Exterior	Wipe down with a clean, soft cloth. Use a damp cloth containing a neutral cleaner to wipe off oil or dirt build up. Clean any chlorine staining (rust colored spots) using a non-abrasive cleanser.
	Underside of Icemaker and Top Kits; Bin Door and Snout	Wipe down with a clean cloth and warm water.
Yearly	Icemaker and Dispenser Unit/Ice Storage Bin	Clean and sanitize per the cleaning and sanitizing instructions provided in this manual. See "III.B. Cleaning and Sanitizing Instructions."
	Water Supply Inlet	Close the icemaker water supply line shut-off valve and drain the water system. Clean the water supply inlet screen.
	Condenser	Inspect. Clean if necessary by using a brush or vacuum cleaner. More frequent cleaning may be required depending on location.
	Water Hoses	Inspect the water hoses and clean/replace if necessary.

B. Cleaning and Sanitizing Instructions

The icemaker must be cleaned and sanitized at least once a year. More frequent cleaning and sanitizing may be required in some water conditions.

⚠ WARNING

- To prevent injury to individuals and damage to the icemaker, do not use ammonia type cleaners.
- Carefully follow any instructions provided with the bottles of cleaning and sanitizing solution.
- Always wear liquid-proof gloves and goggles to prevent the cleaning and sanitizing solutions from coming into contact with skin or eyes.
- Do not leave the icemaker unattended when panels are off.

NOTICE

To prevent damage to the water pump seal, do not leave the control switch in the "WASH" position for extended periods when the water tank is empty.

IMPORTANT

- The cleaning valve is opened during cleaning and sanitizing to allow solution flow to the inside of the evaporator. It should be closed for all icemaking operation. The compressor will not operate unless this valve is completely closed.
- To close the cleaning valve, the valve handle should be at a right angle to the valve body. To open the cleaning valve, the valve handle should be parallel to the valve body.

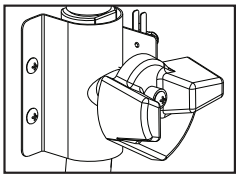

CLOSED
Icemaking Operation

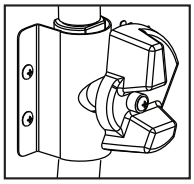

OPEN
Cleaning and Sanitizing Operation
(allows solution flow to the inside of the evaporator)

Preparation

1) Remove the front panel, then move the control switch to the "OFF" position. After 3 min., move the control switch to the "ICE" position, then replace the front panel.
2) After 3 min., remove the front panel, then move the control switch to the "OFF" position.
3) Remove all ice from the dispenser unit/ice storage bin. **WARNING! If on a dispenser unit, turn off the dispenser unit power supply after dispensing the ice.**

Cleaning

4) Remove the front insulation panel, then remove the drain plug. See Fig. 19. After the water tank has drained, replace the drain plug and front insulation panel.
NOTICE! **Be careful not to cross thread the drain plug.**

5) To fill the water tank, move the control switch to the "ICE" position, then replace the front panel. After 3 min., remove the front panel, then move the control switch to the "OFF" position.

6) Remove the front insulation panel, then pour Hoshizaki "Scale Away" into the water tank. See table below for amount. Replace the front insulation panel. Turn the cleaning valve to the left until completely vertical (open).

Model	Scale Away
KM-1601 and Smaller	32 fl. oz. (946 ml)
KM-1900 and Larger	43 fl. oz. (1,272 ml)

7) ***NOTICE!*** **To avoid excessive foaming, wait 1 min. before proceeding.**
After 1 min., move the control switch to the "WASH" position, then replace the front panel.

8) After 30 min., remove the front panel, then move the control switch to the "OFF" position.

9) Remove the front insulation panel, then remove the drain plug. After the water tank has drained, replace the drain plug and front insulation panel.

10) In bad or severe water conditions, turn off the power supply, then remove, clean (cleaning solution = 5 oz. Hoshizaki "Scale Away" per gallon of warm water), rinse, and replace the cube guide, float switch, water supply tubes, spray tubes, and spray guides; turn on the power supply when complete. Otherwise, continue to step 11.

Cleaning Rinse

11) Turn the cleaning valve to the right until completely horizontal (closed). Move the control switch to the "ICE" position, then replace the front panel. After 3 min., remove the front panel, then move the control switch to the "OFF" position. Note: The icemaker will not operate unless the cleaning valve is completely closed.

12) Turn the cleaning valve to the left until completely vertical (open). Move the control switch to the "WASH" position, then replace the front panel. After 5 min., remove the front panel, then move the control switch to the "OFF" position.

13) Remove the front insulation panel, then remove the drain plug. After the water tank has drained, replace the drain plug and front insulation panel.

Sanitizing

14) To fill the water tank, turn the cleaning valve to the right until completely horizontal (closed). Move the control switch to the "ICE" position, then replace the front panel. After 3 min., remove the front panel, then move the control switch to the "OFF" position.

15) Remove the front insulation panel, then pour an 8.25% sodium hypochlorite solution (chlorine bleach) into the water tank. See table below for amount. Replace the front insulation panel. Turn the cleaning valve to the left until completely vertical (open). ***IMPORTANT!*** **Use regular bleach with no additives. Using a bleach with additives causes excessive foaming during sanitizing, reducing the effectiveness of sanitizing.**

Model	8.25% Sodium Hypochlorite Solution (Chlorine Bleach)
KM-1601 and Smaller	3.75 fl. oz. (110 ml)
KM-1900 and Larger	5 fl. oz. (148 ml)

16) ***NOTICE!*** **To avoid excessive foaming, wait 1 min. before proceeding.** After 1 min., move the control switch to the "WASH" position, then replace the front panel.

17) After 45 min., remove the front panel, then move the control switch to the "OFF" position.

18) Remove the front insulation panel, then remove the drain plug. After the water tank has drained, replace the drain plug and front insulation panel.

Sanitizing Rinse 1

19) Turn the cleaning valve to the right until completely horizontal (closed). Move the control switch to the "ICE" position, then replace the front panel. After 3 min., remove the front panel, then move the control switch to the "OFF" position.

20) Turn the cleaning valve to the left until completely vertical (open). Move the control switch to the "WASH" position, then replace the front panel. After 5 min., remove the front panel, then move the control switch to the "OFF" position.

21) Remove the front insulation panel, then remove the drain plug. After the water tank has drained, replace the drain plug and front insulation panel.

Sanitizing Rinse 2

22) Turn the cleaning valve to the right until completely horizontal (closed). Move the control switch to the "ICE" position, then replace the front panel. After 3 min., remove the front panel, then move the control switch to the "OFF" position.

23) Turn the cleaning valve to the left until completely vertical (open). Move the control switch to the "WASH" position, then replace the front panel. After 5 min., remove the front panel, then move the control switch to the "OFF" position.

24) Remove the front insulation panel, then remove the drain plug. After the water tank has drained, replace the drain plug and front insulation panel.

Sanitizing Rinse 3

25) Turn the cleaning valve to the right until completely horizontal (closed). Move the control switch to the "ICE" position, then replace the front panel. After 3 min., remove the front panel, then move the control switch to the "OFF" position.

26) Turn the cleaning valve to the left until completely vertical (open). Move the control switch to the "WASH" position, then replace the front panel. After 5 min., remove the front panel, then move the control switch to the "OFF" position.

27) Remove the front insulation panel, then remove the drain plug. After the water tank has drained, replace the drain plug and front insulation panel.

28) Clean the dispenser unit/ice storage bin liner using a neutral cleaner. Rinse thoroughly after cleaning.

29) Turn the cleaning valve to the right until completely horizontal (closed), then move the control switch to the "ICE" position. Note: If on a dispenser unit, turn on the dispenser unit power supply.

30) Replace all panels in their correct positions.

IV. Preparing the Icemaker for Periods of Non-Use

NOTICE
• When storing the icemaker for an extended time or in sub-freezing temperatures, follow the instructions below to prevent damage. • To prevent damage to the water pump seal, do not leave the control switch in the "WASH" position for extended periods when the water tank is empty.

When the icemaker is not used for two or three days under normal conditions, it is sufficient to move the control switch to the "OFF" position. When storing the icemaker for an extended time or in sub-freezing temperatures, follow the instructions below.

1. Remove the water from the icemaker water supply line:

1) Turn off the power supply, then remove the front panel.
2) Move the control switch to the "OFF" position.
3) Close the icemaker water supply line shut-off valve, then open the icemaker water supply line drain valve.
4) Allow the line to drain by gravity.
5) Attach a compressed air or carbon dioxide supply to the icemaker water supply line drain valve.
6) Move the control switch to the "ICE" position.
7) Replace the front panel in its correct position, then turn on the power supply.
8) Blow the icemaker water supply line out using the compressed air or carbon dioxide supply.
9) Close the icemaker water supply line drain valve.

2. Drain the water tank:

1) Turn off the power supply, then remove the front panel.
2) Move the control switch to the "OFF" position.
3) Remove the insulation panel. Remove the drain plug located on the lower front part of the ice chute. See Fig. 19. Allow the water tank to drain.
4) Replace the drain plug and the insulation panel in their correct positions. Be careful not to cross thread the drain plug.
5) Remove all ice from the dispenser unit/ice storage bin. Clean the dispenser unit/ice storage bin liner using a neutral cleaner. Rinse thoroughly after cleaning.
6) Replace the front panel in its correct position.

3. On water-cooled models, remove the water from the water-cooled condenser:

1) Make sure the power supply is off, then remove the front, top, and right side panels.
2) Close the condenser water supply line shut-off valve. If connected to a closed loop system, also close the condenser return line shut-off valve.
3) Open the condenser water supply line drain valve. If connected to a closed loop system, also open the condenser return line drain valve.

4) Attach a compressed air or carbon dioxide supply to the condenser water supply line drain valve.

5) Open the water regulating valve by using a screwdriver to pry up on the spring retainer underneath the spring. While holding the valve open, blow out the condenser using the compressed air or carbon dioxide supply until water stops coming out.

6) Close the drain valve(s).

7) Replace the right side panel, top panel, and front panel in their correct positions.

V. Disposal

The appliance contains refrigerant and must be disposed of in accordance with applicable national, state, and local codes and regulations. Refrigerant must be recovered by properly certified service personnel.

HOSHIZAKI AMERICA, INC.

618 Hwy. 74 South, Peachtree City, GA 30269 USA (P) 770.487.2331 (F) 770.487.3360 hoshizakiamerica.com

1A3759-011