Reliability is a
beautiful thing™

HOSHIZAKI®
CRESCENT CUBER
WITH STORAGE BIN

MODELS

KM-150BAF
KM-150BWF

INSTRUCTION MANUAL

CYCLESAVER™ evercheck

ISSUED: JULY 3, 1998
REVISED: DEC. 11, 2003

FOREWORD

IMPORTANT

Only qualified service technicians should attempt to install, service or maintain this icemaker. No installation, service or maintenance should be undertaken until the technician has thoroughly read this Instruction Manual. Likewise, the owner/manager should not proceed to operate the icemaker until the installer has instructed them on its proper operation.

HOSHIZAKI provides this manual primarily to assist qualified service technicians in the installation, maintenance and service of the icemaker.

Should the reader have any questions or concerns which have not been satisfactorily addressed, please call or write to the HOSHIZAKI Technical Support Department for assistance.

HOSHIZAKI AMERICA, INC.
618 Highway 74 South
Peachtree City, GA 30269

Attn: HOSHIZAKI Technical Support Department

Phone: 1-800-233-1940 Technical Service
(770) 487-2331
Fax: (770) 487-3360

NOTE: To expedite assistance, all correspondence/communication MUST include the following information:

- Model Number
- Serial Number
- Complete and detailed explanation of the problem

- Please review this manual. It should be read carefully before the icemaker is installed and operated. Only qualified service technicians should install, service and maintain the icemaker. This manual should be made available to the technician prior to installation, maintenance or service.

- Keep this manual with the icemaker for later reference.

CONTENTS

PAGE

I. SPECIFICATIONS 4
1. NAMEPLATE RATING 4
[a] KM-150BAF (Air-cooled) 4
[b] KM-150BWF (Water-cooled) 5
2. DIMENSIONS/CONNECTIONS 6
[a] KM-150BAF 6
[b] KM-150BWF 7

II. INSTALLATION AND OPERATING INSTRUCTIONS 8
1. CHECKS BEFORE INSTALLATION 8
2. LOCATION 9
3. ELECTRICAL CONNECTION 9
4. WATER SUPPLY AND DRAIN CONNECTIONS 10
5. FINAL CHECK LIST 12
6. START UP 13
7. PREPARING THE ICEMAKER FOR LONG STORAGE 14

III. CLEANING AND MAINTENANCE INSTRUCTIONS 16
1. CLEANING INSTRUCTIONS 16
[a] CLEANING PROCEDURE 16
[b] SANITIZING PROCEDURE 18
2. MAINTENANCE 19

I. SPECIFICATIONS

1. NAMEPLATE RATING

[a] KM-150BAF (Air-cooled)



See the Nameplate for electrical and refrigeration specifications. This Nameplate is located on the upper right hand side of the rear panel.
Since this Nameplate is located on the rear panel of the icemaker, it cannot be read when the back of the icemaker is against a wall or against another piece of kitchen equipment. Therefore, the necessary electrical and refrigeration information is also on the rating label, which can be easily seen by removing only the front panel of the icemaker.

We reserve the right to make changes in specifications and design without prior notice.

[b] KM-150BWF (Water-cooled)



See the Nameplate for electrical and refrigeration specifications. This Nameplate is located on the upper right hand side of the rear panel.
Since this Nameplate is located on the rear panel of the icemaker, it cannot be read when the back of the icemaker is against a wall or against another piece of kitchen equipment. Therefore, the necessary electrical and refrigeration information is also on the rating label, which can be easily seen by removing only the front panel of the icemaker.

We reserve the right to make changes in specifications and design without prior notice.

2. DIMENSIONS/CONNECTIONS

Units: millimeters
(inches)

[a] KM-150BAF

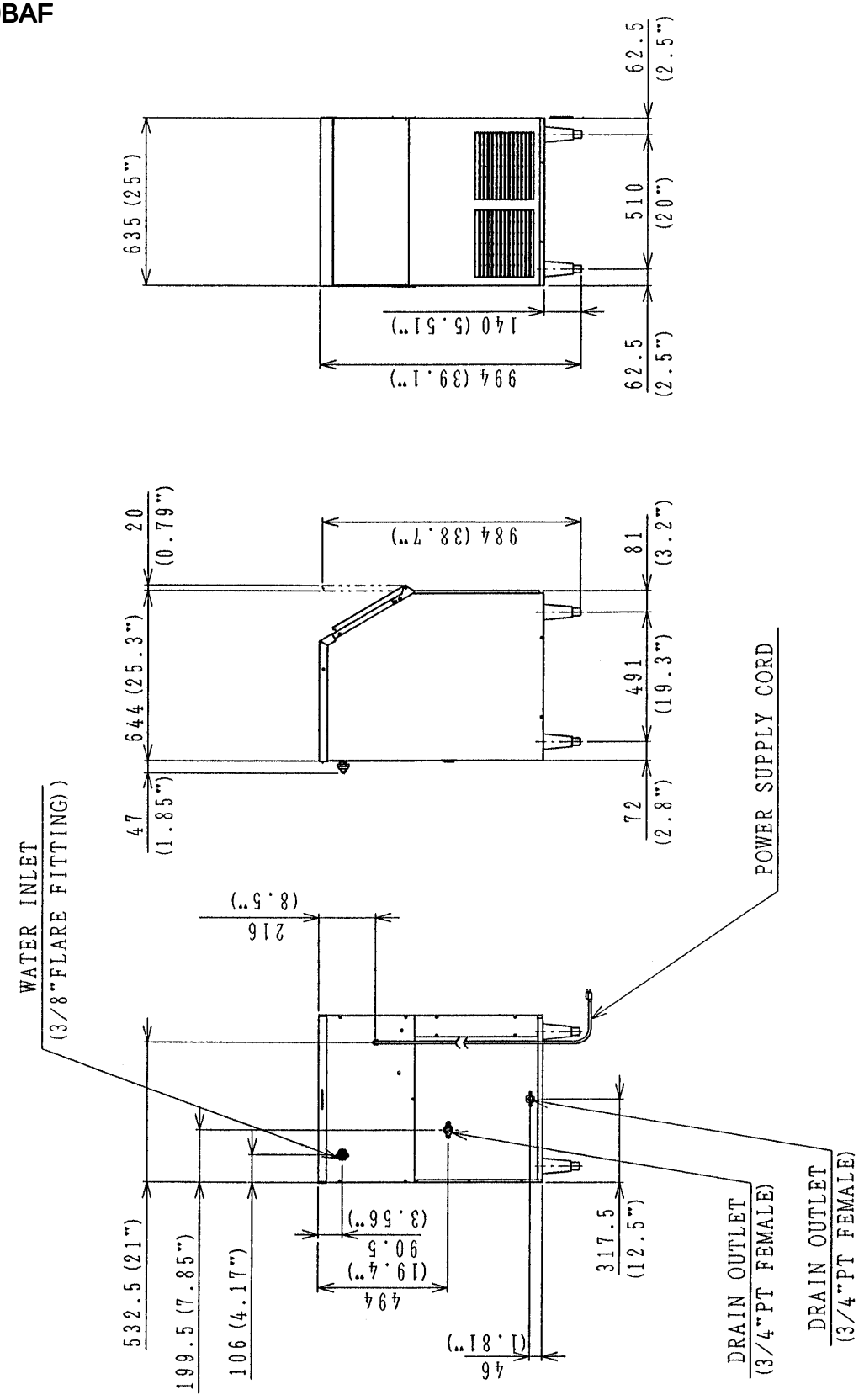

[b] KM-150BWF

Units: millimeters
(inches)

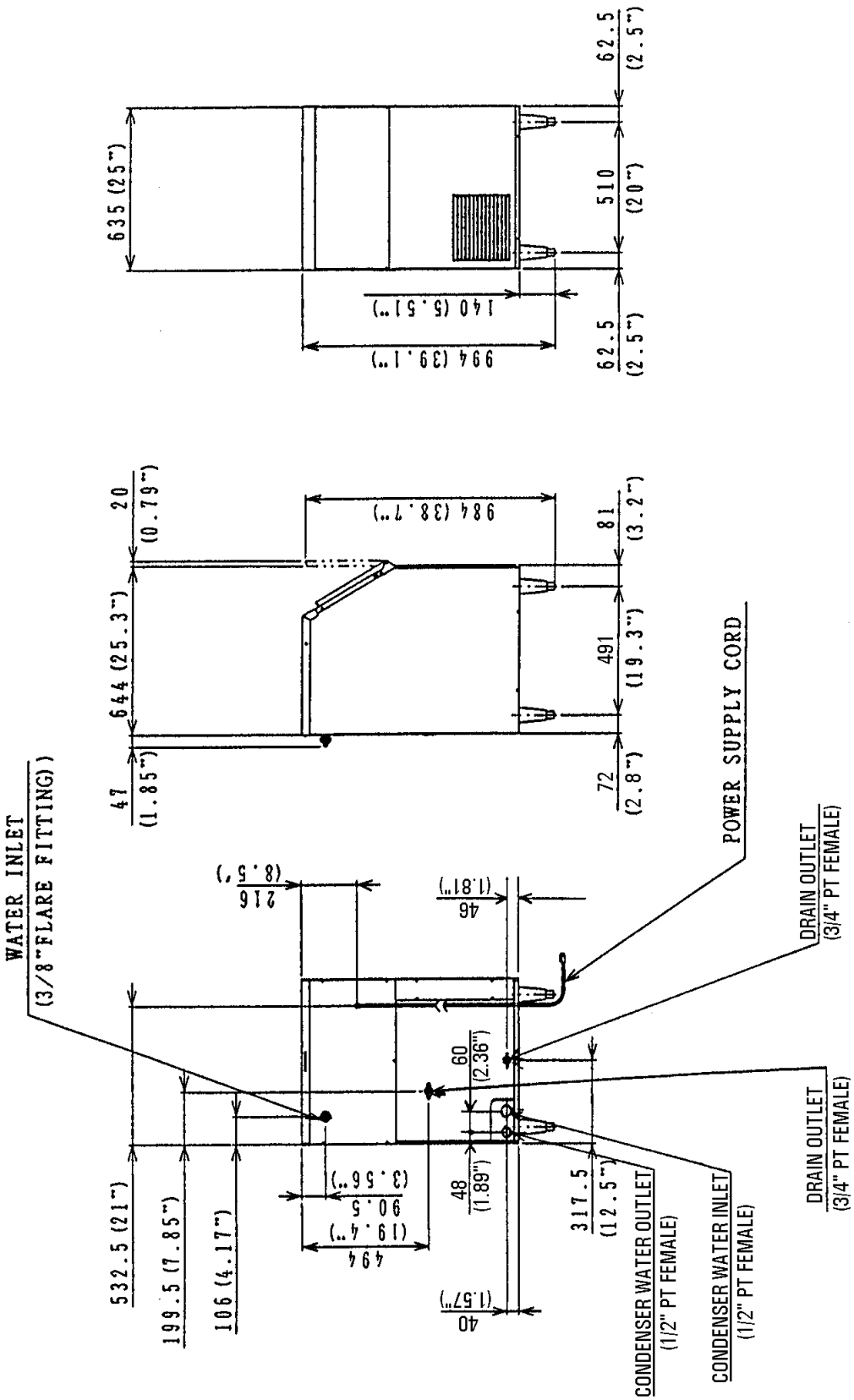

II. INSTALLATION AND OPERATING INSTRUCTIONS

1. CHECKS BEFORE INSTALLATION

IMPORTANT

1. Remove shipping cartons, tape(s) and packing. If any are left in the icemaker, it will not work properly.

2. Ensure all components, fasteners and thumbscrews are securely in place.

1) Remove the Top Panel and the Front Panel to prevent damage when installing the icemaker.

2) Remove the package containing the accessories.

3) Remove the protective plastic film from the panels. If the icemaker is exposed to the sun or to heat, remove the film after the icemaker cools.

4) Check that the refrigerant lines do not rub or touch lines or other surfaces, and that the fan blade turns freely.

5) Check that the Compressor is snug on all mounting pads.

6) See the Nameplate on the Rear Panel, and check that your voltage supplied corresponds with the voltage specified on the Nameplate.

2. LOCATION

IMPORTANT

This icemaker is not intended for outdoor use. Normal operating ambient temperature should be within +45°F (7°C) to +100°F (38°C); Normal operating water temperature should be within +45°F (7°C) to +90°F (32°C). Operation of the icemaker, for extended periods, outside of these normal temperature ranges may affect production capacity.

For best operating results:

- Icemaker should not be located next to ovens, grills or other high heat producing equipment.
- Level the icemaker from side-to-side and front-to-rear by adjusting the legs. Location should provide a firm and level foundation for the equipment.
- Allow 6" (15 cm.) clearance at rear and top for ease of maintenance and/or service should they be required.

3. ELECTRICAL CONNECTION

CAUTION

The GREEN grounding wire in the factory-installed power cord is attached to a screw on the rear panel. If it becomes necessary to remove or replace the power cord, be sure to attach the ground wire of the power cord to this screw on the rear panel.

- This icemaker must have a separate power supply or receptacle of proper capacity. See the Nameplate.
- Usually an electrical permit and services of a licensed electrician are required.

4. WATER SUPPLY AND DRAIN CONNECTIONS - See Fig. 1

CAUTION

To prevent damage to the equipment, do not operate the icemaker when the water supply is OFF, or if the pressure is below 10 PSIG (0.7 bar). Do not run the icemaker until the proper water pressure is reached.

- Water supply inlet is 1/2" FPT.

  Note: On water-cooled model, two water supply inlets are provided. One is the ice making water inlet, and the other (1/2" FPT) is the cooling water inlet.

- A water supply line shut-off valve and drain valve should be installed. A minimum of 3/8" OD copper tubing is recommended for the water supply lines.

- Water supply pressure should be a minimum of 10 PSIG (0.7 bar) and a maximum of 113 PSIG (7.5 bar). If the pressure exceeds 113 PSIG (7.5 bar), the use of a pressure reducing valve is required.

- Drain outlet for icemaker dump is 3/4" FPT. The bin drain is 3/4" FPT. The icemaker drain and the condenser drain piping connections must be made separately from the bin drain.

  Note: On water-cooled model, a 1/2" FPT is provided for the condenser drain outlet.

- The drains must have 1/4" fall per foot (2 cm. per meter) on horizontal runs to get a good flow.

- The drains should not be piped directly to the sewer system. An air gap of a minimum of 2 vertical inches (5 cm.) should be between the end of the drain pipe from the icemaker or the ice bin and the floor drain.

- This icemaker should be installed in accordance with applicable national, state and local regulations.

- A plumbing permit and services of a licensed plumber may be required in some areas.

- In some areas, a back flow preventer may be required in the cooling water circuit.

KM-150BAF and KM-150BWF

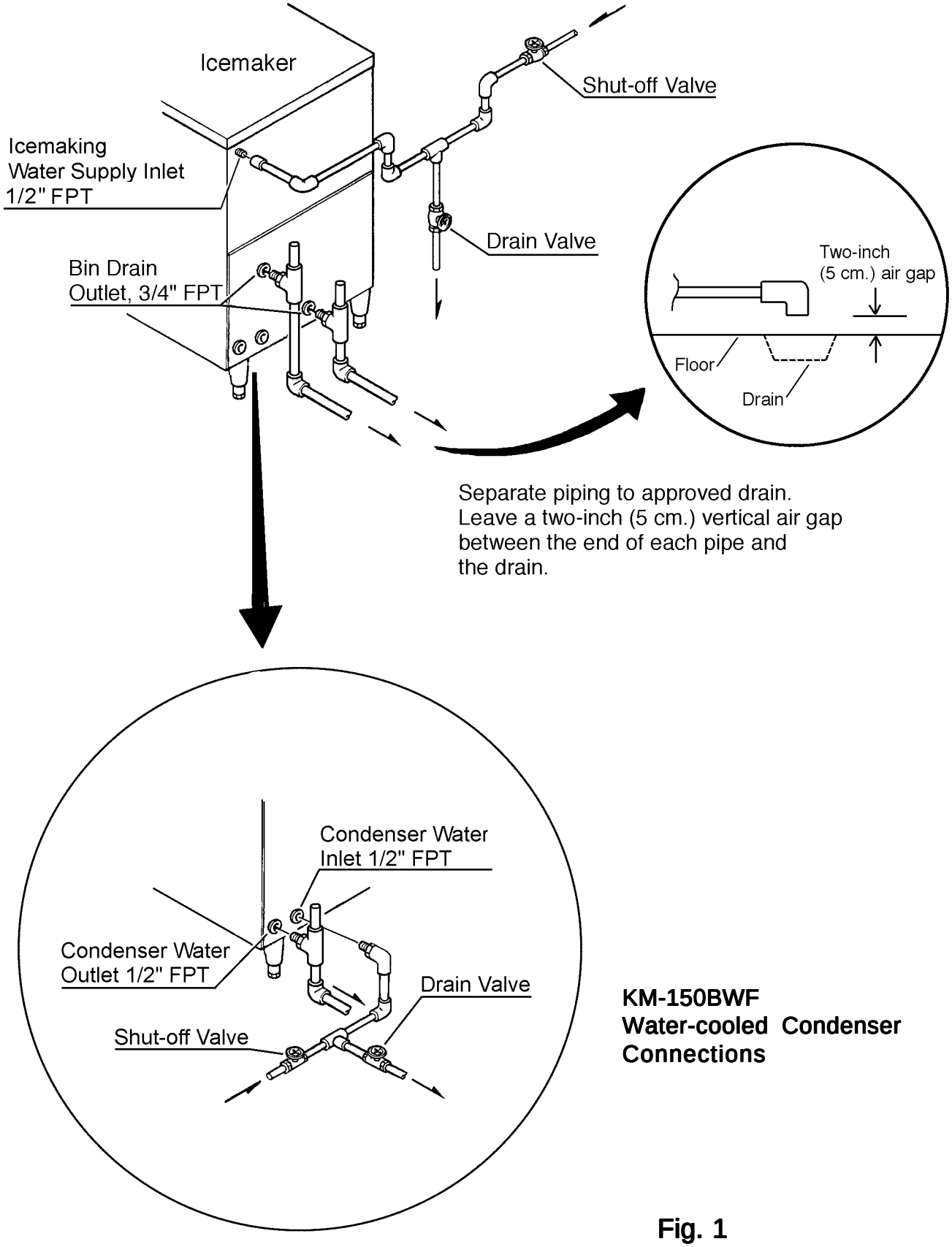

KM-150BWF
Water-cooled Condenser Connections

Fig. 1

5. FINAL CHECK LIST

1) Is the icemaker level?

2) Is the icemaker in a site where the ambient temperature is within +45°F (7°C) to +100°F (38°C) and the water temperature within +45°F (7°C) to +90°F (32°C) all year around?

3) Is there at least 6" (15 cm.) clearance at the rear and top of the icemaker for maintenance or service?

4) Have all shipping cartons, tape(s) and packing been removed from the icemaker? Is the cube guide in its correct position?

5) Are all components, fasteners and thumbscrews securely in place?

6) Have all electrical and piping connections been made?

7) Has the power supply voltage been checked or tested against the nameplate rating? And has a proper ground been installed in the icemaker?

8) Are the Water Supply Line Shut-off Valve and Drain Valve installed? Has the water supply pressure been checked to ensure a minimum of 10 PSIG (0.7 bar) and a maximum of 113 PSIG (7.5 bar)?

Note: The icemaker may stop running when the water supply is OFF, or if the pressure is below 10 PSIG (0.7 bar). When the proper water pressure is reached, the icemaker automatically starts running again.

9) Have the compressor hold-down bolts and refrigerant lines been checked against vibration and possible failure?

10) Has the Bin Control Switch been checked for correct operation? When the icemaker is running, hold an ice cube in contact with the Bulb. The icemaker should stop within 6 to 10 seconds.

11) Has the end user been given the instruction manual, and instructed on how to operate the icemaker and the importance of the recommended periodic maintenance?

12) Has the end user been given the name and telephone number of an authorized service agent?

13) Has the warranty tag been filled out and forwarded to the factory for warranty registration?

6. START UP

CAUTION

1. All parts are factory-adjusted. Improper adjustments may result in failure.
2. If the unit is turned off, wait for at least 3 minutes before restarting the icemaker to prevent damage to the Compressor.

1) Open the Water Supply Line Shut-off Valve.

2) Remove the Front Panel.

3) Move the Control Switch, on the Control Box, to the “ICE” position.

4) Run the icemaker for about 10 minutes, and move the switch to the “OFF” position.

5) Open the Door.

6) Remove the Cube Guide and the Overflow Pipe to drain the Water Tank. See Fig. 2.

7) Replace the Overflow Pipe and the Cube Guide in their correct positions.

8) Clean the Storage Bin.

9) Move the switch to the “ICE” position, and start the automatic icemaking process.

10) Replace the Front Panel in its correct position.

11) Shut the Door.

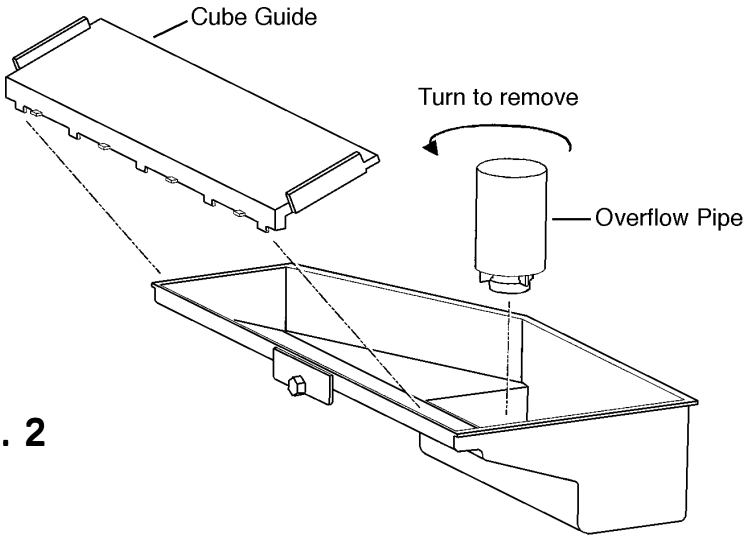

Fig. 2

7. PREPARING THE ICEMAKER FOR LONG STORAGE

IMPORTANT

When shutting off the icemaker for an extended time, drain out all water from the water line and remove the ice from the Storage Bin. The Storage Bin should be cleaned and dried. Drain the icemaker, using air or carbon dioxide, to prevent damage to the water supply line at sub-freezing temperatures. Shut off the icemaker until the proper ambient temperature is resumed.

- When the icemaker is not used for two or three days, it is sufficient to only move the Control Switch to the "OFF" position, unless the icemaker will be at sub-freezing temperatures.

[1] On water-cooled model only, first remove the water from the water-cooled condenser:

1) Remove the Front Panel.

2) Move the Control Switch, on the Control Box, to the "OFF" position.

3) Wait 3 minutes.

4) Move the Control Switch to the "ICE" position.

5) Allow 5 minutes for the icemaker to fill with water and the Water Pump to start operating.

6) Close the Water-cooled Condenser Water Supply Line Shut-off Valve. See Fig. 1.

7) Open the Drain Valve for the water-cooled condenser water supply line.

8) Allow the line to drain by gravity.

9) Attach compressed air or carbon dioxide supply to the Condenser Water Line Drain Valve.

10) Blow the water-cooled condenser out using compressed air or carbon dioxide until water stops coming out.

[2] Remove the water from the potable water supply line:

1) Remove the Front Panel. (Except water-cooled model)

2) Move the Control Switch, on the Control Box, to the "OFF" position.

3) Wait 3 minutes.

4) Close the Potable Water Supply Line Shut-off Valve and open the Potable Water Supply Line Drain Valve. See Fig. 1.

5) Allow the line to drain by gravity.

6) Attach compressed air or carbon dioxide supply to the Potable Water Line Drain Valve.

7) Move the Control Switch to the “ICE” position.

8) Blow the potable water line out using compressed air or carbon dioxide.

[3] Drain the Potable Water Tank:

1) Disconnect the power supply.

2) Move the Control Switch to the “OFF” position.

3) Open the Door.

4) Remove the Cube Guide and the Overflow Pipe to drain the Water Tank.

5) Place the Overflow Pipe and the Cube Guide in their correct positions.

6) Remove all ice from the Storage Bin, and clean the Storage Bin.

7) Shut the Door.

8) Replace the Front Panel in its correct position.

9) Close the Drain Valve.

III. CLEANING AND MAINTENANCE INSTRUCTIONS

IMPORTANT

Ensure all components, fasteners and thumbscrews are securely in place after any maintenance or cleaning is done to the equipment.

1. CLEANING INSTRUCTIONS

WARNING

1. Hoshizaki recommends cleaning this unit at least once a year. More frequent cleaning, however, may be required in some existing water conditions.

2. To prevent injury to individuals and damage to the icemaker, do not use ammonia type cleaners.

3. Always wear liquid-proof gloves for safe handling of the cleaning and sanitizing solutions. This will prevent irritation in case the solutions come into contact with skin.

[a] CLEANING PROCEDURE

1) Dilute approximately 5 fl. oz. (148 ml.) of recommended cleaner, Hoshizaki "Scale Away" or "Lime-A-Way" (Economics Laboratory, Inc.) with 1 gal. (3.8 l.) of water.

2) Remove the Front Panel.

3) Remove all ice from the Evaporator and the Storage Bin.

Note: To remove cubes on the Evaporator, move the Control Switch, on the Control Box, to the "OFF" position and move it back to the "ICE" position after 3 minutes. The defrost cycle starts and the cubes will be removed from the Evaporator.

4) Move the Control Switch to the "OFF" position. Open the Door.

5) Remove the Cube Guide and the Overflow Pipe to drain the Water Tank. See Fig. 2. Place the Overflow Pipe in position.

6) Pour the cleaning solution into the Water Tank.

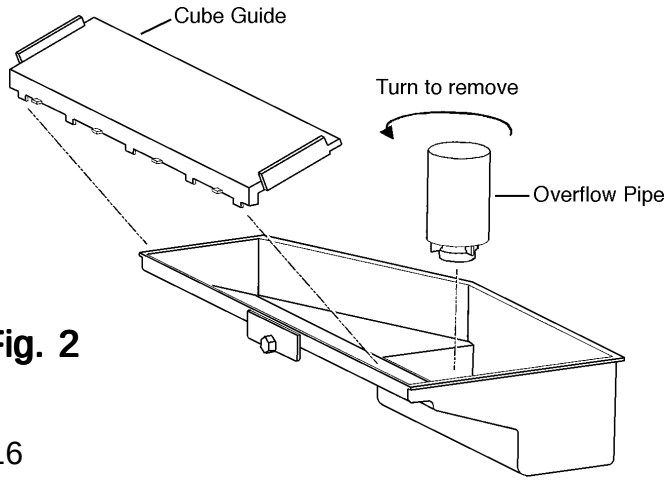

Fig. 2

7) Place the Cube Guide in position.

8) Move the Control Switch to the “WASH” position. Shut the Door.

9) After 30 minutes, move the Control Switch to the “OFF” position.

10) Remove the Cube Guide and the Overflow Pipe to drain the Water Tank. Place the Overflow Pipe and Cube Guide in their correct positions.

11) Move the Control Switch to the “ICE” position to fill the Water Tank with water.

12) After 3 minutes, move the Control Switch to the “OFF” position.

13) Move the Control Switch to the “WASH” position.

14) After 5 minutes, move the Control Switch to the “OFF” position.

15) Remove the Cube Guide and the Overflow Pipe to drain the Water Tank. Place the Overflow Pipe and Cube Guide in their correct positions.

16) Repeat the above steps 11) through 15) three more times to rinse thoroughly.

17) Remove one end of the Tank Drain Hose and remove the Thumbscrew at the front of the Water Tank. Remove the Water Tank by pulling it toward you slightly and lowering it. See Fig. 3.

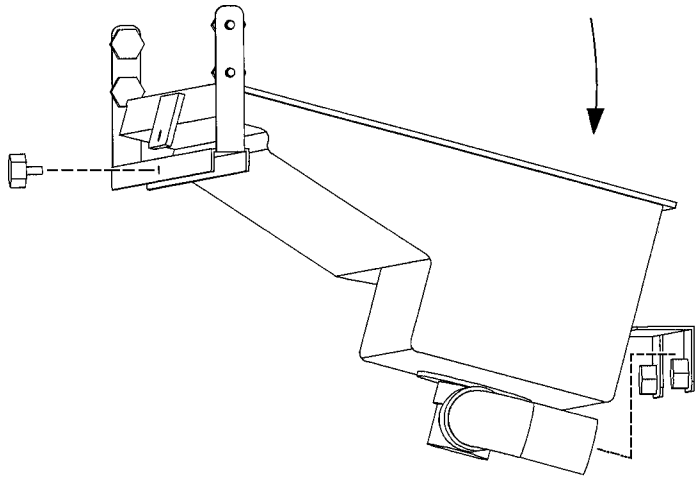

Fig. 3

18) Remove the Water Tank Brackets and the Thermostat Bracket from the Bin by removing the Thumbscrews.

19) Dilute approximately 5 fl. oz. (148 ml.) of recommended cleaner Hoshizaki “Scale Away” or “Lime-A-Way” (Economics Laboratory, Inc.) with 1 gal. (3.8 l.) of water.

20) Wash the bin liner, the Thermostat Bracket, the Water Tank Brackets and the Water Tank by using a nylon scouring pad, brushes and the cleaning solution.

22) Rinse them thoroughly with water.

[b] SANITIZING PROCEDURE - Following Cleaning Procedure

1) Dilute a 5.25% Sodium Hypochlorite solution (chlorine bleach) with water. [Add 0.5 fl. oz. (15 ml.) of sanitizer to 1 gal. (3.8 l.) of water.]

2) Wash the bin liner, the Thermostat Bracket, the Water Tank Brackets and the Water Tank using the above sanitizing solution.

3) Rinse the above parts thoroughly with water.

4) Place the Thermostat Bracket, the Water Tank Brackets, the Water Tank and the Tank Drain Hose in their correct positions.

5) Remove the Cube Guide.

6) Pour the sanitizing solution into the Water Tank.

7) Place the Cube Guide in its correct position.

8) Move the Control Switch to the “WASH” position.

9) Shut the Door.

10) After 15 minutes, move the Control Switch to the “OFF” position.

11) Open the Door.

12) Remove the Cube Guide and the Overflow Pipe to drain the Water Tank. Place the Overflow Pipe and the Cube Guide in position.

13) Repeat the above steps 11) through 15) in “Cleaning Procedure” two times to rinse thoroughly.

14) Flush the Storage Bin with water.

15) Move the Control Switch to the “ICE” position, and start the automatic icemaking process.

16) Place the Front Panel in position, and shut the Door.

2. MAINTENANCE

IMPORTANT

This icemaker must be maintained individually, referring to the instruction manual and labels provided with the icemaker.

1) Exterior Panels

To keep the exterior clean, wipe occasionally with a clean and soft cloth. Use a damp cloth containing a neutral cleaner to wipe off oil or dirt build up.

2) Storage Bin and Scoop

- Wash your hands before removing ice. Use the plastic scoop provided (Accessory).
- The Storage Bin is for ice use only. Do not store anything else in the bin.
- Keep the scoop clean. Clean it by using a neutral cleaner and rinse thoroughly.
- Clean the bin liner by using a neutral cleaner. Rinse thoroughly after cleaning.

3) Air Filter (Air-cooled model only)

The plastic mesh air filter located behind the Louver removes dirt or dust from the air, and keeps the Condenser from getting clogged. As the filter gets clogged, the icemaker's performance will be reduced. Check the filter at least twice a month. When it is clogged, use warm water and a neutral cleaner to wash the filter.

4) Condenser (Air-cooled model only)

Check the Condenser once a year and clean if required by using a brush or vacuum cleaner. More frequent cleaning may be required depending on the location of the icemaker.

HOSHIZAKI

HOSHIZAKI AMERICA, INC.

618 HIGHWAY 74 SOUTH
PEACHTREE CITY, GA 30269
U.S.A.

PHONE: 770-487-2331

91U1TA10G