ISSUED: NOV. 6, 2001

HOSHIZAKI
MODULAR CRESCENT CUBER

MODEL

KM-900MAH50

INSTRUCTION MANUAL

IMPORTANT

Only qualified service technicians should attempt to install, service or maintain this icemaker. No installation, service or maintenance should be undertaken until the technician has thoroughly read this Instruction Manual. Likewise, the owner/manager should not proceed to operate the icemaker until the installer has instructed them on its proper operation.

HOSHIZAKI provides this manual primarily to assist qualified service technicians in the installation, maintenance and service of the icemaker.

Should the reader have any questions or concerns which have not been satisfactorily addressed, please call or write to the HOSHIZAKI Technical Support Department for assistance.

HOSHIZAKI AMERICA, INC.
618 Highway 74 South
Peachtree City, GA 30269

Attn: HOSHIZAKI Technical Support Department

Phone: 1-800-233-1940 Technical Service
(770) 487-2331
Fax: (770) 487-3360

NOTE: To expedite assistance, all correspondence/communication MUST include the following information:

- Model Number
- Serial Number
- Complete and detailed explanation of the problem

- Please review this manual. It should be read carefully before the icemaker is installed and operated. Only qualified service technicians should install, service and maintain the icemaker. This manual should be made available to the technician prior to installation, maintenance or service.

- Keep this manual with the icemaker for future reference.

CONTENTS

PAGE

I. SPECIFICATIONS 4
1. NAMEPLATE RATING 4
[a] KM-900MAH50 (Air-cooled) 4

2. DIMENSIONS/CONNECTIONS 5
[a] KM-900MAH50 5

II. INSTALLATION AND OPERATING INSTRUCTIONS 6
1. CHECKS BEFORE INSTALLATION 6
2. HOW TO REMOVE PANELS 7
3. LOCATION 7
4. SET UP 8
5. ELECTRICAL CONNECTION 8
6. WATER SUPPLY AND DRAIN CONNECTIONS 9
7. FINAL CHECK LIST 11
8. START UP 12
9. PREPARING THE ICEMAKER FOR LONG STORAGE 14

III. CLEANING AND MAINTENANCE INSTRUCTIONS 15
1. CLEANING INSTRUCTIONS 15
[a] CLEANING PROCEDURE 15
[b] SANITIZING PROCEDURE 17
2. MAINTENANCE 18

I. SPECIFICATIONS

1. NAMEPLATE RATING

[a] KM-900MAH50 (Air-cooled)

HOSHIZAKI ICE MAKER	
MODEL NUMBER	KM-900MAH50
SERIAL NUMBER	
AC SUPPLY VOLTAGE	230V 50 Hz
ELECTRIC CONSUMPTION	2040W
AMPERAGE	10A
STARTING AMPERAGE	58A
REFRIGERANT R404A	1550 G
WEIGHT	98 Kg
MAX OPERATING PRESSURE	2.88 MPA
NOT INTENDED FOR OUTDOOR USE	
HOSHIZAKI AMERICA, INC. Peachtree City, GA USA	

See the Nameplate for electrical and refrigeration specifications. This Nameplate is located on the upper right hand side of rear panel.

Since this Nameplate is located on the rear panel of the icemaker, it cannot be read when the back of the icemaker is against a wall or against another piece of kitchen equipment. Therefore, the necessary electrical and refrigeration information is also on the rating label, which can be easily seen by removing only the front panel of the icemaker.

We reserve the right to make changes in specifications and design without prior notice.

2. DIMENSIONS/CONNECTIONS

Unit: mm. (inches)

[a] KM-900MAH50

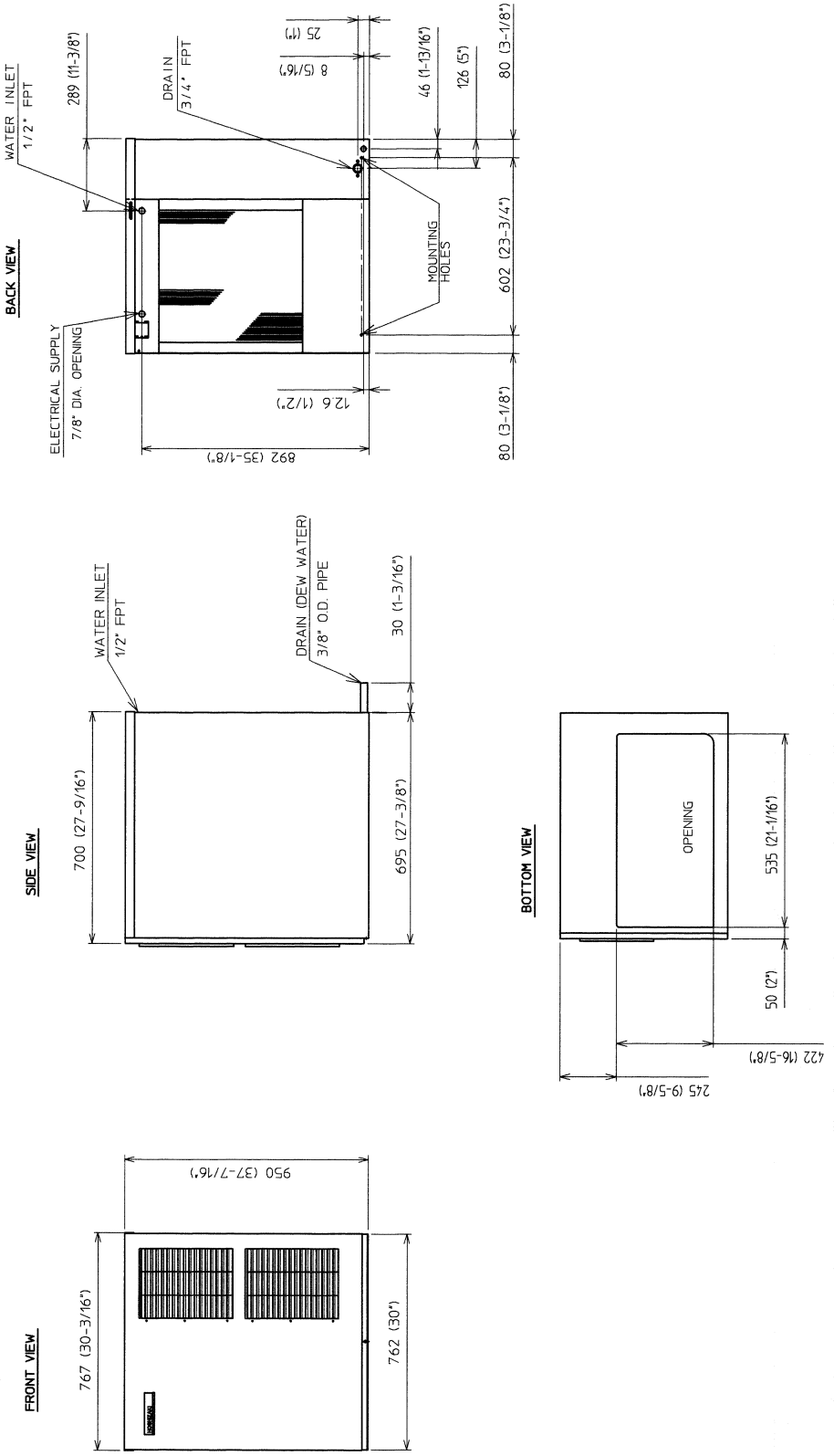

II. INSTALLATION AND OPERATING INSTRUCTIONS

1. CHECKS BEFORE INSTALLATION

IMPORTANT

Remove shipping carton, tape(s) and packing. If packing material is left in the icemaker, it will not work properly.

1) Remove the panels to prevent damage when installing the icemaker. See “2. HOW TO REMOVE PANELS.”

2) Remove the package containing the accessories.

3) Release the Bin Switch assembly:
   a) Remove the Base Cover to access the Bin Switch assembly.
   b) Remove the Bin Control Shield by loosening the thumbscrew.
   c) Remove the shipping tape holding the switch actuator arm and paddle in place so that the paddle swings down freely.
   d) Replace the Shield, secure the thumbscrew and replace the Base Cover.

4) Remove the protective plastic film from the panels. If the icemaker is exposed to the sun or to heat, remove the film after the icemaker cools.

5) Check that the refrigerant lines do not rub or touch lines or other surfaces, and that the fan blade turns freely.

6) Check that the Compressor is snug on all mounting pads.

7) See the Nameplate on the Rear Panel, and check that your voltage supplied corresponds with the voltage specified on the Nameplate.

8) This icemaker needs a storage bin. The recommended storage bin is HOSHIZAKI ICE STORAGE BIN, Model B-500 series.

2. HOW TO REMOVE PANELS - See Fig. 1

a) Front Panel ..... Remove the screw.
Lift up and pull toward you.

b) Top Panel ..... Lift up slightly its front, push away, and then lift off.

c) Side Panel (R) ..... Remove the screw.
Pull slightly toward you, and lift off.

d) Insulation Panel ... Lift up slightly, and pull toward you.

e) Base Cover ..... Lift up slightly, and pull toward you.

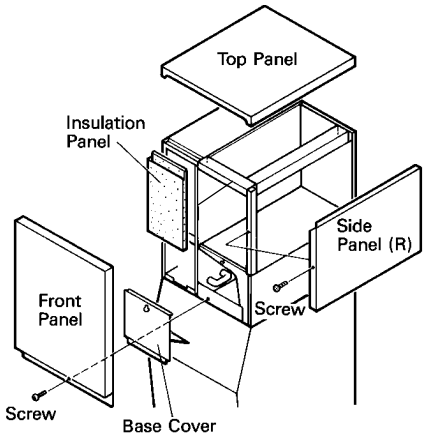

Fig. 1

3. LOCATION

WARNING

This icemaker is not intended for outdoor use. Normal operating ambient temperature should be within +45°F to +100°F; Normal operating water temperature should be within +45°F to +90°F. Operation of the icemaker, for extended periods, outside of these normal temperature ranges may affect production capacity.

For best operating results:

- Icemaker should not be located next to ovens, grills or other high heat producing equipment.
- Location should provide a firm and level foundation for the equipment.
- Allow 6" clearance at rear, sides and top for proper air circulation and ease of maintenance and/or service should they be required.

4. SET UP

1) Unpack the Storage Bin, and attach the four adjustable legs provided (bin accessory) to the bottom of the Storage Bin.

2) Position the Storage Bin in the selected permanent position.

3) Place the icemaker on the top of the Storage Bin.

4) Secure the icemaker to the Storage Bin, by using the two mounting brackets and the four bolts provided. See Fig. 2.

5) Level the icemaker/Storage Bin in both the left-to-right and front-to-rear directions. Adjust the Ice Bin Legs to make the icemaker level.

6) Replace the panels in their correct positions.

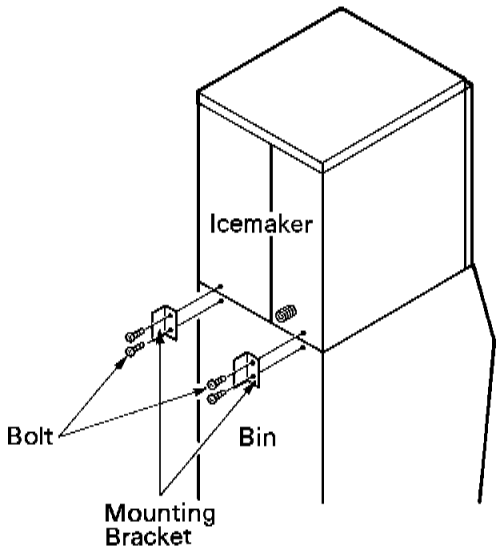

Fig. 2

5. ELECTRICAL CONNECTION

WARNING

This icemaker requires a ground that meets the national and local electrical code requirements. To prevent possible electrical shock to individuals or extensive damage to the equipment, install a proper ground wire to the icemaker.

- This icemaker must have a separate power supply or receptacle of proper capacity. See the Nameplate.
- The opening for the power supply connection is 7/8" DIA to fit a 1/2" trade size conduit.
- Usually an electrical permit and services of a licensed electrician are required.

6. WATER SUPPLY AND DRAIN CONNECTIONS - See Fig. 3

WARNING

To prevent damage to the pump assembly, do not operate the icemaker when the water supply is OFF, or if the pressure is below 10 PSIG. Do not run the icemaker until the proper water pressure is reached.

- Water supply inlet is 1/2" female pipe thread (FPT).
- A water supply line shut-off valve and drain valve should be installed. A minimum of 3/8" OD copper tubing is recommended for the water supply lines.
- Water supply pressure should be a minimum of 10 PSIG and a maximum of 113 PSIG. If the pressure exceeds 113 PSIG, the use of a pressure reducing valve is required.
- Drain outlet for icemaker dump is 3/4" FPT. The drain for condensation is a 3/8" ID pipe. The icemaker drain and the condenser drain piping connections must be made separately from the bin drain.
- The drains must have 1/4" fall per foot on horizontal runs to get a good flow.
- The drains should not be piped directly to the sewer system. An air gap of a minimum of 2 vertical inches should be between the end of the drain pipe from the icemaker or the ice bin and the floor drain.
- This icemaker should be installed in accordance with applicable national, state and local regulations.
- A plumbing permit and services of a licensed plumber may be required in some areas.

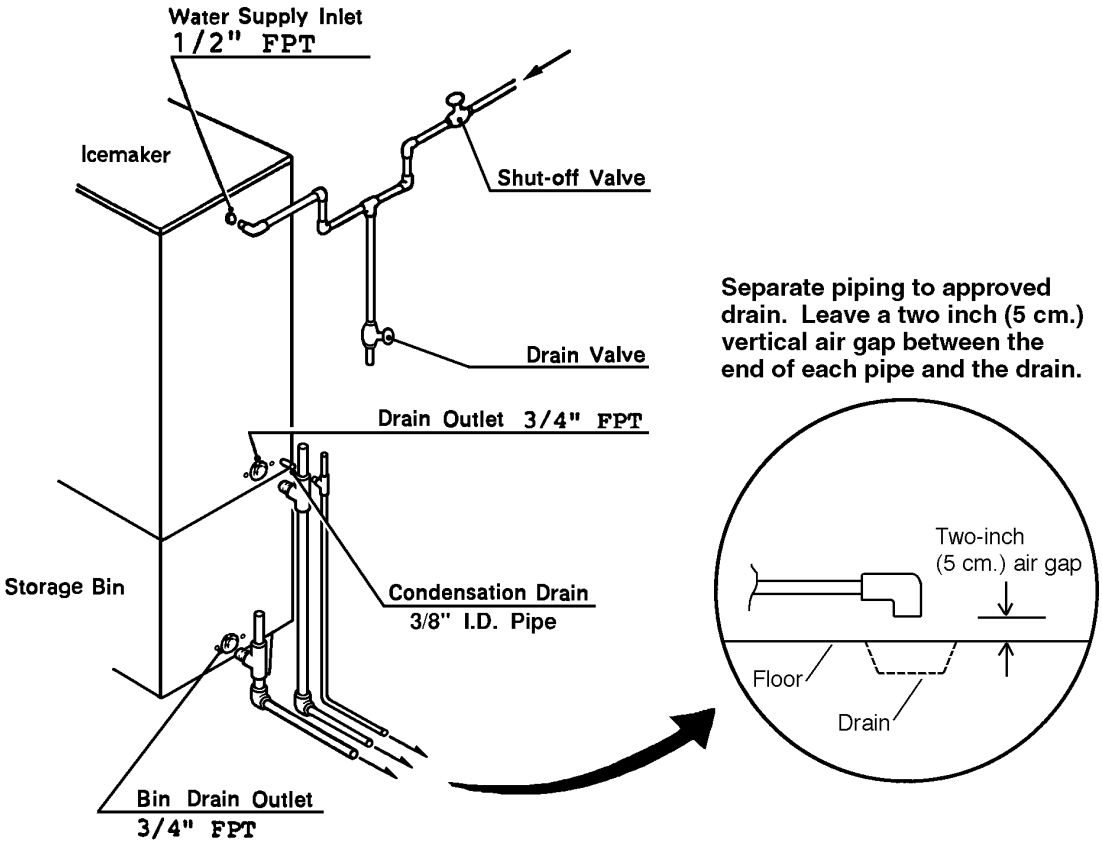
Water Supply Inlet
1/2" FPT
Icemaker
Shut-off Valve
Drain Valve
Drain Outlet 3/4" FPT
Storage Bin
Condensation Drain
3/8" I.D. Pipe
Bin Drain Outlet
3/4" FPT
Separate piping to approved drain. Leave a two inch (5 cm.) vertical air gap between the end of each pipe and the drain.
Two-inch
(5 cm.) air gap
Floor
Drain

Fig. 3

7. FINAL CHECK LIST

1) Is the icemaker level?

2) Is the icemaker in a site where the ambient temperature is within +45°F to +100°F all year around?

3) Is there at least 6" clearance around the icemaker for maintenance or service?

4) Have all shipping carton, tapes and packing been removed from the icemaker?
   a) Is the cube guide in its correct position?
   b) Does the Bin Switch assembly actuator arm and paddle swing freely?

5) Have all electrical and piping connections been made?

6) Has the power supply voltage been checked or tested against the nameplate rating? And has a proper ground been installed in the icemaker?

7) Are the Water Supply Line Shut-off Valve and Drain Valve installed? Has the water supply pressure been checked to ensure a minimum of 10 PSIG and a maximum of 113 PSIG?

   Note: The icemaker may stop running when the water supply is OFF, or if the pressure is below 10 PSIG. When the proper water pressure is reached, the icemaker automatically starts running again.

8) Have the compressor hold-down bolts and refrigerant lines been checked against vibration and possible failure?

9) Has the end user been given the instruction manual, and instructed on how to operate the icemaker and the importance of the recommended periodic maintenance?

10) Has the end user been given the name and telephone number of an authorized service agent?

11) Has the warranty tag been filled out and forwarded to the factory for warranty registration?

8. START UP

CAUTION

1. All parts are factory-adjusted. Improper adjustments may result in failure.

2. If the unit is turned off, wait for at least 3 minutes before restarting the icemaker to prevent damage to the Compressor.

3. Do not operate the unit in the “WASH” position without water in the Water Tank. This will cause damage to the Water Pump seal.

1) Open the Water Supply Line Shut-off Valve.

2) Remove the Front Panel.

3) Move the Control Switch, on the Control Box, to the “ICE” position.

4) Replace the Front Panel in its correct position.

5) Turn on the power supply, and allow the Water Tank to fill with water and the icemaker to operate for a total of 10 minutes.

6) Remove the Front Panel and the Base Cover and turn the control switch to “OFF”.

7) Check to assure that the Bin Switch shuts the unit down.
   a) Turn the control switch to “ICE”.
   b) Allow the unit to cycle into the freeze mode. This occurs when the pump motor starts to supply water upwards, through the supply tube. After 1-2 minutes in freeze, move the bin switch paddle fully to the right See Fig. 4.
   c) The unit should shut down within 3-5 seconds.

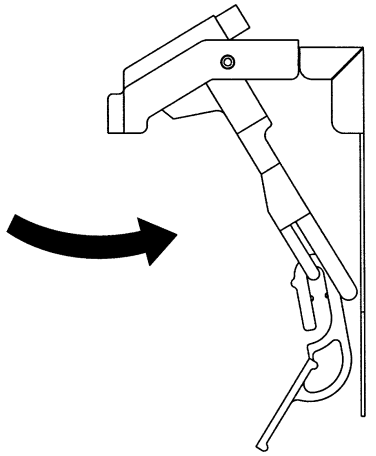

Fig. 4

Note: The Bin Switch will only shut down the unit at the end of a harvest or within the first 5 minutes of the freeze cycle. To shut the unit down outside of this time period turn the control switch to “OFF”.

8) Turn off the power supply. Remove one end of the Pump Tubing, and drain the Water Tank. See Fig. 5.

9) Replace the Pump Tubing in its correct position.

10) Clean the Storage Bin.

11) Replace the Base Cover and the Front Panel in their correct positions.

12) Turn on the power supply, and start the automatic icemaking process.

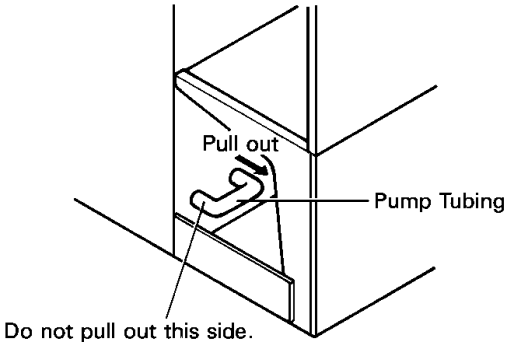

Fig. 5

9. PREPARING THE ICEMAKER FOR LONG STORAGE

WARNING

When shutting off the icemaker for an extended time, drain out all water from the water line and remove the ice from the Storage Bin. The Storage Bin should be cleaned and dried. Drain the icemaker to prevent damage to the water supply line at sub-freezing temperatures, using a foot or hand pump. Shut off the icemaker until the proper ambient temperature is resumed.

- When the icemaker is not used for two or three days, it is sufficient to only move the Control Switch to the "OFF" position, unless the icemaker will be at sub-freezing temperatures.

[1] Remove the water from the potable water supply line:

1) Remove the Front Panel.

2) Move the Control Switch, on the Control Box, to the “OFF” position.

3) Wait 3 minutes.

4) Close the Potable Water Supply Line Shut-off Valve and open the Potable Water Supply Line Drain Valve. See Fig. 3.

5) Allow the line to drain by gravity.

6) Attach compressed air or carbon dioxide supply to the Potable Water Line Drain Valve.

7) Move the Control Switch to the “ICE” position.

8) Blow the potable water line out using compressed air or carbon dioxide.

[2] Drain the Potable Water Tank:

1) Turn off the power supply.

2) Move the Control Switch, on the Control Box, to the “OFF” position.

3) Remove the Base Cover.

4) Remove one end of the Pump Tubing, and drain the Water Tank.

5) Replace the Pump Tubing and the Base Cover in their correct positions.

6) Remove all ice from the Storage Bin, and clean the Storage Bin.

7) Replace the Front Panel in its correct position.

III. CLEANING AND MAINTENANCE INSTRUCTIONS

1. CLEANING INSTRUCTIONS

WARNING

1. HOSHIZAKI recommends cleaning this unit at least once a year. More frequent cleaning, however, may be required in some existing water conditions.

2. To prevent injury to individuals and damage to the icemaker, do not use ammonia type cleaners.

3. Always wear liquid-proof gloves for safe handling of the cleaning and sanitizing solution. This will prevent irritation from the solution coming into contact with skin.

[a] CLEANING PROCEDURE

1) Dilute approximately 16 fl. oz. (473 ml.) of recommended cleaner Hoshizaki “Scale Away” or “LIME-A-WAY,” (Economics Laboratory, Inc.) with 3 gal. (11.4 l.) of water.

2) Remove all ice from the Evaporator and the Storage Bin.

Note: To remove cubes on the Evaporator, turn off the power supply and turn it on after 3 minutes. The defrost cycle starts and the cubes will be removed from the Evaporator.

3) Turn off the power supply.

4) Remove the Top Panel, the Front Panel and the Base Cover, and then remove the Insulation Panel by lifting up the panel slightly and pulling it toward you.

5) Remove one end of the Pump Tubing. Drain the Water Tank. Replace the Pump Tubing in its correct position. See Fig. 5.

6) Pour the cleaning solution into the Water Tank.

7) Move the Control Switch, on the Control Box, to the “WASH” position.

8) Replace the Insulation Panel, the Front Panel and the Top Panel in their correct positions.

9) Turn on the power supply, and start the washing process.

10) Turn off the power supply after 30 minutes.

11) Remove the Top Panel and the Front Panel.

12) Remove one end of the Pump Tubing. Drain the Water Tank. Replace the Pump Tubing in its correct position.

13) Move the Control Switch to the “ICE” position.

14) Replace the Front Panel and the Top Panel in their correct positions.

15) Turn on the power supply to fill the Water Tank with water.

16) Turn off the power supply after 3 minutes.

17) Remove the Front Panel, and move the Control Switch to the “WASH” position.

18) Replace the Front Panel in its correct position.

19) Turn on the power supply to rinse off the cleaning solution.

20) Turn off the power supply after 5 minutes.

21) Remove the Front Panel.

22) Remove one end of the Pump Tubing. Drain the Water Tank. Replace the Pump Tubing in its correct position.

23) Repeat the above steps 13) through 22) three more times to rinse thoroughly.

Note: If you do not sanitize the icemaker, go to the step 10) in “[b] SANITIZING PROCEDURE.”

[b] SANITIZING PROCEDURE - Following Cleaning Procedure

1) Dilute IMS-II Sanitizer or a 5.25% Sodium Hypochlorite solution with water [Add 1.5 fl. oz. (44 ml.) of sanitizer to 3 gal. of water].

   Note: IMS-II Sanitizer, Part #SA0004, is available through your Hoshizaki Dealer.

2) Remove the Insulation Panel.

3) Pour the sanitizing solution into the Water Tank.

4) Replace the Insulation Panel and the Front Panel in their correct positions.

   Note: Make sure that the Control Switch is in the “WASH” position.

5) Turn on the power supply, and start the sanitizing process.

6) Turn off the power supply after 15 minutes.

7) Remove the Front Panel.

8) Remove one end of the Pump Tubing. Drain the Water Tank. Replace the Pump Tubing in its correct position.

9) Repeat the above steps 13) through 22) in “[a] CLEANING PROCEDURE” two times to rinse thoroughly.

10) Move the Control Switch to the “ICE” position.

11) Replace the Front Panel, the Base Cover and the Top Panel in their correct positions.

12) Clean the Storage Bin with water.

13) Turn on the power supply, and start the automatic icemaking process.

2. MAINTENANCE

IMPORTANT

This icemaker must be maintained individually, referring to the instruction manual and labels provided with the icemaker.

1) Stainless Steel Exterior

To prevent corrosion, wipe the exterior occasionally with a clean and soft cloth. Use a damp cloth containing a neutral cleaner to wipe off oil or dirt build up.

2) Storage Bin and Scoop

- Wash your hands before removing ice. Use the Plastic Scoop provided (Accessory).
- The Storage Bin is for ice use only. Do not store anything else in the Bin.
- Keep the Scoop clean. Clean it by using a neutral cleaner and rinse thoroughly.
- Clean the bin liner by using a neutral cleaner. Rinse thoroughly after cleaning.

3) Air Filter

A plastic mesh air filter removes dirt or dust from the air, and keeps the Condenser from getting clogged. As the Filter gets clogged, the icemaker's performance will be reduced. Check the Filter at least twice a month. When clogged, use warm water and a neutral cleaner to wash the Filter.

4) Condenser

Check the Condenser once a year, and clean if required by using a brush or vacuum cleaner. More frequent cleaning may be required depending on the location of the icemaker.

HOSHIZAKI

HOSHIZAKI AMERICA, INC.

618 HIGHWAY 74 SOUTH
PEACHTREE CITY, GA 30269
U.S.A.

PHONE: 770-487-2331

91A1JJ10A