HOSHIZAKI

Instruction Manual

Low-Profile Modular Crescent Cuber

Models
KML-325MAJ, MWJ
KML-500MAJ, MWJ
KML-700MAJ, MWJ, MRJZ

hoshizakiamerica.com

Issued: 9-23-2016
Revised: 7-5-2022

⚠ WARNING

Only qualified service technicians should install and service the appliance. To obtain the name and phone number of your local Hoshizaki Certified Service Representative, visit www.hoshizakiamerica.com. No installation or service should be undertaken until the technician has thoroughly read this Instruction Manual. Likewise, the owner/manager should not proceed to operate the appliance until the installer has instructed them on its proper operation. Failure to install, operate, and maintain the appliance in accordance with this manual will adversely affect safety, performance, component life, and warranty coverage and may result in costly water damage. Proper installation is the responsibility of the installer. Product failure or property damage due to improper installation is not covered under warranty.

Hoshizaki provides this manual primarily to assist qualified service technicians in the installation, maintenance, and service of the appliance.

Should the reader have any questions or concerns which have not been satisfactorily addressed, please call, send an e-mail message, or write to the Hoshizaki Technical Support Department for assistance.

Phone: 1-800-233-1940; (770) 487-2331
Fax: 1-800-843-1056; (770) 487-3360

E-mail: techsupport@hoshizaki.com

HOSHIZAKI AMERICA, INC.
618 Highway 74 South
Peachtree City, GA 30269
Attn: Hoshizaki Technical Support Department

NOTE: To expedite assistance, all correspondence/communication MUST include the following information:

- Model Number _____
- Serial Number _____
- Complete and detailed explanation of the problem.

IMPORTANT
This manual should be read carefully before the appliance is installed and operated. Read the warnings and guidelines contained in this manual carefully as they provide essential information for the continued safe use and maintenance of the appliance. Retain this manual for any further reference that may be necessary.

CONTENTS

Important Safety Information 4
I. Specifications 6
A. Electrical and Refrigerant Data 6
1. KML-325M_J 6
2. KML-500M_J 6
3. KML-700M_J(Z) 7
B. Dimensions/Connections 8
1. Air-Cooled Models (MAJ) 8
2. Water-Cooled Models (MWJ) 9
3. Remote Models (MRJZ) 10
4. Remote Condenser Unit URC-9FZ (use with KML-700MRJZ) 11
II. Installation and Operating Instructions 12
A. Location 12
B. Checks Before Installation 12
C. How to Remove Panels 13
D. Setup 14
1. Dispenser Unit/Ice Storage Bin Setup 14
2. Bin Control Installation 14
3. Icemaker Installation 15
E. Electrical Connection 18
F. Water Supply and Drain Connections 19
1. Icemaker 20
2. Water-Cooled Condenser 21
G. Installation of Remote Condenser Unit 25
1. Location 25
2. Checks Before Installation 26
3. Setup 26
4. Line Set Size and Refrigerant Charge 26
5. Line Set Installation 27
6. Electrical Connection 29
7. Stacking Remote Condenser Unit 30
H. Final Checklist 31
1. Pre-Startup 31
2. Post-Startup 32
I. Startup 33
III. Maintenance 36
A. Maintenance Schedule 36
B. Cleaning and Sanitizing Instructions 37
IV. Preparing the Icemaker for Periods of Non-Use 39
V. Disposal 41

Important Safety Information

Throughout this manual, notices appear to bring your attention to situations which could result in death, serious injury, damage to the appliance, or damage to property.

⚠ WARNING **Indicates a hazardous situation which could result in death or serious injury.**

NOTICE **Indicates a situation which could result in damage to the appliance or property.**

IMPORTANT **Indicates important information about the installation, use, and care of the appliance.**

⚠ WARNING

The appliance should be destined only to the use for which it has been expressly conceived. Any other use should be considered improper and therefore dangerous. The manufacturer cannot be held responsible for injury or damage resulting from improper, incorrect, and unreasonable use. Failure to install, operate, and maintain the appliance in accordance with this manual will adversely affect safety, performance, component life, and warranty coverage and may result in costly water damage.

To reduce the risk of death, electric shock, serious injury, or fire, follow basic precautions including the following:

- Only qualified service technicians should install and service the appliance.
- The appliance must be installed in accordance with applicable national, state, and local codes and regulations.
- Electrical connection must be hard-wired and must meet national, state, and local electrical code requirements. Failure to meet these code requirements could result in death, electric shock, serious injury, fire, or damage.
- The icemaker requires an independent power supply of proper capacity. See the nameplate for electrical specifications. Failure to use an independent power supply of proper capacity can result in a tripped breaker, blown fuse, damage to existing wiring, or component failure. This could lead to heat generation or fire.
- **THE ICEMAKER MUST BE GROUNDED.** Failure to properly ground the icemaker could result in death or serious injury.
- To reduce the risk of electric shock, do not touch the control switch or service switch with damp hands.
- Move the control switch to the "OFF" position and turn off the power supply before servicing. Lockout/Tagout to prevent the power supply from being turned back on inadvertently.
- Do not make any alterations to the appliance. Alterations could result in electric shock, serious injury, fire, or damage.
- The appliance is not intended for use by persons (including children) with reduced physical, sensory, or mental capabilities, or lack of experience and knowledge, unless they have been given supervision or instruction concerning use of the appliance by a person responsible for their safety.

⚠ WARNING, continued

- Children should be properly supervised around the appliance.
- Do not climb, stand, or hang on the appliance or allow children or animals to do so. Serious injury could occur or the appliance could be damaged.
- Do not use combustible spray or place volatile or flammable substances near the appliance. They might catch fire.
- Keep the area around the appliance clean. Dirt, dust, or insects in the appliance could cause harm to individuals or damage to the appliance.

Additional Warning for Remote Models

- **THE REMOTE CONDENSER UNIT MUST BE GROUNDED.** The power supply and ground connection to the remote condenser unit are supplied from the icemaker. Failure to properly ground the remote condenser unit could result in death or serious injury.
- Wire routing (conduit) and disconnect (if required) must meet national, state, and local electrical code requirements. Failure to meet these code requirements could result in death, electric shock, serious injury, fire, or damage.

NOTICE

- Follow the water supply, drain connection, and maintenance instructions carefully to reduce the risk of costly water damage.
- In areas where water damage is a concern, install in a contained area with a floor drain.
- Install the icemaker in a location that stays above freezing. Normal operating ambient temperature must be within 45°F to 100°F (7°C to 38°C).
- Do not leave the icemaker on during extended periods of non-use, extended absences, or in sub-freezing temperatures. To properly prepare the icemaker for these occasions, follow the instructions in "IV. Preparing the Icemaker for Periods of Non-Use."
- Do not place objects on top of the appliance.
- The dispenser unit/ice storage bin is for ice use only. Do not store anything else in the dispenser unit/ice storage bin.

I. Specifications

A. Electrical and Refrigerant Data

The rating label and nameplate provide electrical and refrigerant data. The rating label can be seen by removing the front panel. The nameplate is located on the rear panel. For certification marks, see the nameplate.
We reserve the right to make changes in specifications and design without prior notice.

1. KML-325M_J

Model Number	**KML-325MAJ**	**KML-325MWJ**
AC Supply Voltage	115/60/1	115/60/1
Compressor	115V 6.5RLA 50LRA	115V 6.8RLA 50LRA
Pump	115V 0.46RLA 49W	115V 0.46RLA 49W
Fan	115V 1.0FLA 1/15HP	--- --- ---
Other	115V 0.15A	115V 0.15A
Maximum Fuse Size	15 AMPS	15 AMPS
Max. HACR Breaker (USA Only)	15 AMPS	15 AMPS
Max. Circuit Breaker (Canada Only)	15 AMPS	15 AMPS
Minimum Circuit Ampacity	15 AMPS	15 AMPS
Design Pressure	HI-467PSI LO-250PSI	HI-427PSI LO-250PSI
Refrigerant	404A 1 LB 5.2 OZ.	404A 14.1 OZ.

2. KML-500M_J

Model Number	**KML-500MAJ**	**KML-500MWJ**
AC Supply Voltage	115/60/1	115/60/1
Compressor	115V 8.7RLA 54.5LRA	115V 10.6RLA 70LRA
Pump	115V 0.46RLA 49W	115V 0.46RLA 49W
Fan	115V 1.0FLA 1/15HP	--- --- ---
Other	120V 0.15A	120V 0.15A
Maximum Fuse Size	20 AMPS	20 AMPS
Max. HACR Breaker (USA Only)	20 AMPS	20 AMPS
Max. Circuit Breaker (Canada Only)	20 AMPS	20 AMPS
Minimum Circuit Ampacity	20 AMPS	20 AMPS
Design Pressure	HI-467PSI LO-250PSI	HI-427PSI LO-250PSI
Refrigerant	404A 1 LB. 4.3 OZ.	404A 15.9 OZ.

3. KML-700M_J(Z)

Model Number	KML-700MAJ	KML-700MWJ	KML-700MRJZ
AC Supply Voltage	115/60/1	115/60/1	115/60/1
Compressor	115V 13.4RLA 93LRA	115V 12.1RLA 93LRA	115V 12.3RLA 93LRA
Pump	115V 0.46FLA 49W	115V 0.46FLA 49W	115V 0.46FLA 49W
Fan	115V 1.0FLA 1/15HP	--- --- ---	115V 1.3A MAX (Fan in URC)
Other	115V 0.15A	115V 0.15A	115V 0.15A
Maximum Fuse Size	20 AMPS	20 AMPS	20 AMPS
Max. HACR Breaker (USA Only)	20 AMPS	20 AMPS	20 AMPS
Max. Circuit Breaker (Canada Only)	20 AMPS	20 AMPS	20 AMPS
Minimum Circuit Ampacity	20 AMPS	20 AMPS	20 AMPS
Design Pressure	HI-467PSI LO-250PSI	HI-427PSI LO-250PSI	HI-467PSI LO-250PSI
Refrigerant	404A 2 LB. 10.3 OZ.	404A 1 LB. 6.0 OZ.	404A Total Refrigerant Charge with Hoshizaki Remote Condenser Unit URC-9FZ: 11 LB. 7.4 OZ.

B. Dimensions/Connections

1. Air-Cooled Models (MAJ)

Units: mm [in.]

Side

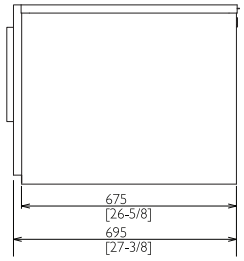

Model Shown: KML-500MAJ

Rear

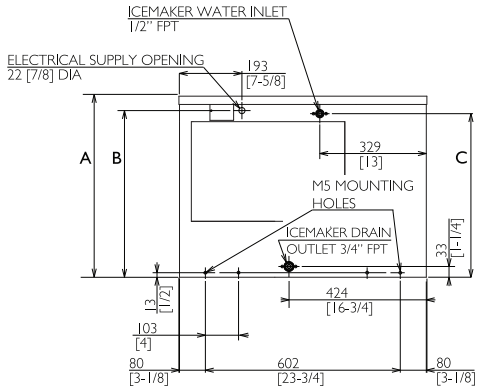

Model Shown: KML-500MAJ

Bottom

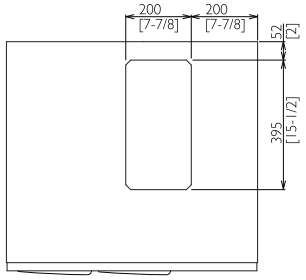

Model Shown: KML-500MAJ

	KML-325MAJ KML-500MAJ	KML-700MAJ
A	559 [22]	659 [26]
B	515 [20-1/4]	615 [24-1/4]
C	505 [19-7/8]	605 [23-7/8]

NOTICE

- Allow 6" (15 cm) clearance at rear, sides, and top for proper air circulation and ease of maintenance and/or service should they be required.
- The ice storage bin opening must match the bottom opening as in the illustration.

2. Water-Cooled Models (MWJ)

Units: mm [in.]

Side

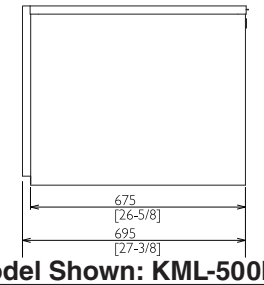

Model Shown: KML-500MWJ

Rear
KML-325/500/MWJ

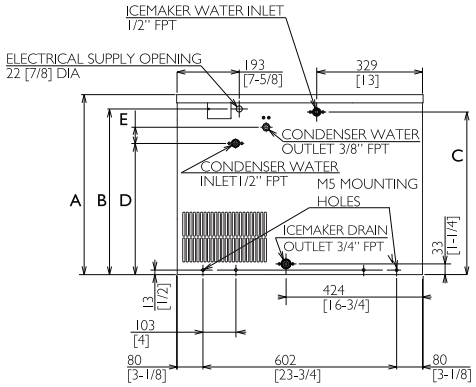

Model Shown: KML-500MWJ

	KML-325MWJ KML-500MWJ	KML-700MWJ
A	559 [22]	659 [26]
B	515 [20-1/4]	615 [24-1/4]
C	505 [19-7/8]	605 [23-7/8]
D	403 [15-7/8]	504 [19-7/8]
E	55 [2-1/8]	-

Rear
KML-700MWJ

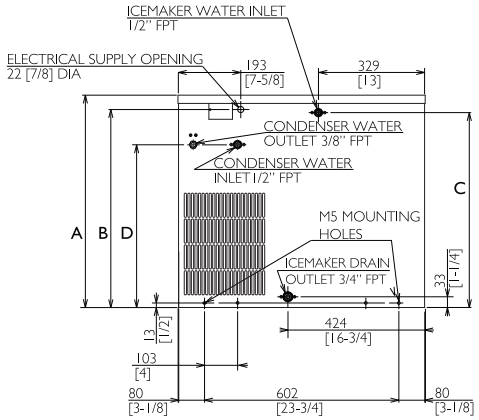

Model Shown: KML-700MWJ

NOTICE

- Allow 6" (15 cm) clearance at rear, sides, and top for proper air circulation and ease of maintenance and/or service should they be required.
- The ice storage bin opening must match the bottom opening as in the illustration.

Bottom

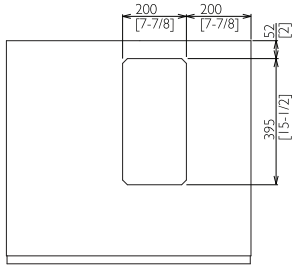

Model Shown: KML-500MWJ

3. Remote Models (MRJZ)

Units: mm [in.]

Side

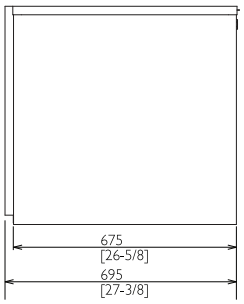

Model Shown: KML-700MRJZ

Rear

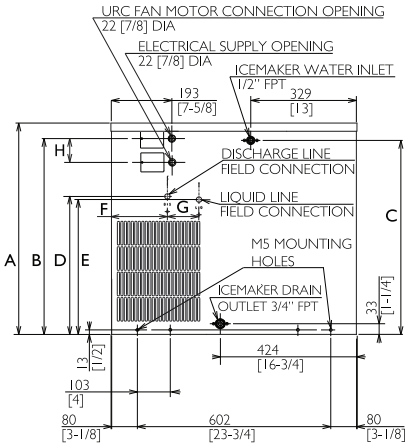

Model Shown: KML-700MRJZ

	KML-700MRJZ
A	654 [25-3/4]
B	610 [24]
C	601 [23-5/8]
D	399 [15-3/4]
E	419 [16-1/2]
F	175 [6-7/8]
G	100 [3-7/8]
H	75 [3]

Bottom

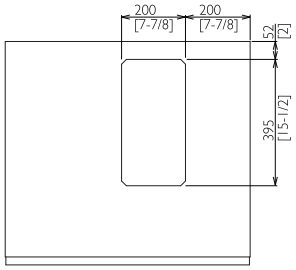

Model Shown: KML-700MRJZ

NOTICE

- Allow 6" (15 cm) clearance at rear, sides, and top for proper air circulation and ease of maintenance and/or service should they be required.
- The ice storage bin opening must match the bottom opening as in the illustration.

4. Remote Condenser Unit URC-9FZ (use with KML-700MRJZ)

Units: mm [in.]

Top

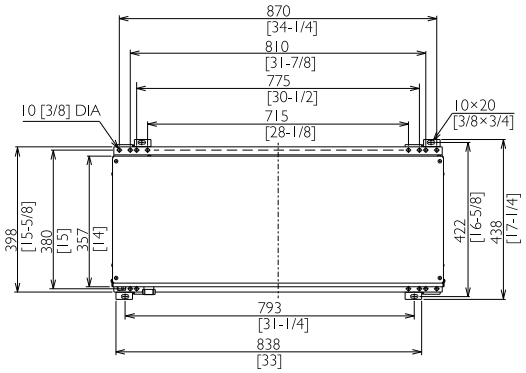

Rear

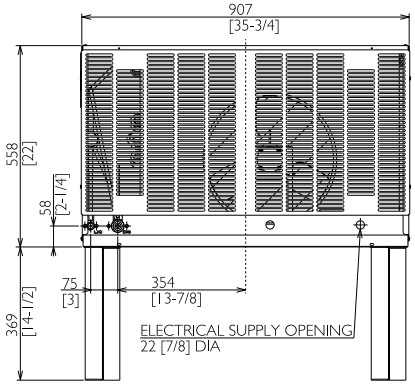

NOTICE
Allow 24" (61 cm) clearance at front and rear for proper air circulation and ease of maintenance and/or service should they be required.

Icemaker Model	**URC-9FZ Heat of Rejection** AT 90°F (32°C) WT 70°F (21°C)
KML-700MRJZ	9,400 BTU/hr

II. Installation and Operating Instructions

⚠ WARNING

- The appliance must be installed in accordance with applicable national, state, and local codes and regulations.
- Failure to install, operate, and maintain the appliance in accordance with this manual will adversely affect safety, performance, component life, and warranty coverage and may result in costly water damage.
- **CHOKING HAZARD:** Ensure all components, fasteners, and thumbscrews are securely in place after installation. Make sure that none have fallen into the dispenser unit/ice storage bin.

A. Location

NOTICE

- The icemaker is not intended for outdoor use. Normal operating ambient temperature must be within 45°F to 100°F (7°C to 38°C); Normal operating water temperature must be within 45°F to 90°F (7°C to 32°C). Operation of the icemaker, for extended periods, outside of these normal temperature ranges may affect icemaker performance.
- The icemaker will not work at sub-freezing temperatures. To prevent damage to the water supply line, drain the icemaker if the air temperature is going to go below 32°F (0°C). See "IV. Preparing the Icemaker for Periods of Non-Use."

- The icemaker should not be located next to ovens, grills, or other high heat producing equipment.
- Allow 6" (15 cm) clearance at rear, sides, and top for proper air circulation and ease of maintenance and/or service should they be required.
- The location should provide a firm and level foundation for the appliance.

B. Checks Before Installation

- Visually inspect the exterior of the shipping container and immediately report any damage to the carrier. Upon opening the container, any concealed damage should also be immediately reported to the carrier.
- Remove the shipping carton, tape, and packing material. If any are left in the appliance, it will not work properly.
- See the nameplate on the rear panel, and check that your voltage supplied corresponds with the voltage specified on the nameplate.
- Remove the panels to prevent damage when installing the appliance. See "II.C. How to Remove Panels."
- Remove the package containing the accessories.
- Remove the protective plastic film from the panels. If the appliance is exposed to the sun or to heat, remove the film after the appliance cools.

- Check that the refrigerant lines do not rub or touch lines or other surfaces, and that the fan blade (if applicable) turns freely.
- Check that the compressor is snug on all mounting pads.
- The icemaker can be installed on a dispenser unit or ice storage bin. The ice storage bins listed below are recommended.

Model Number	Bin Width	Recommended Hoshizaki Ice Storage Bin
KML-325M_J KML-500M_J KML-700M_J(Z)	30" or Wider	B-500 Series

For further options, contact your local Hoshizaki distributor.

- ***NOTICE!*** **Remote model must be connected to an appropriate remote condenser unit. The remote condenser unit listed below is recommended. Connection to a different remote condenser unit will void the warranty unless Hoshizaki approves a different remote condenser unit for your specific application. For further details, contact your local Hoshizaki distributor.**

Model Number	Recommended Hoshizaki Remote Condenser Unit
KML-700MRJZ	URC-9FZ

C. How to Remove Panels
See Fig. 1

- Front Panel: Remove the screw. Lift up and towards you.
- Top Panel: Lift up at front slightly, push rearward, and lift off.
- Right Side Panel: Remove the screw. Slide forward slightly and lift off.
- Front Insulation Panel: Lift up slightly, and pull towards you.
- Top Insulation Panel: Lift off.

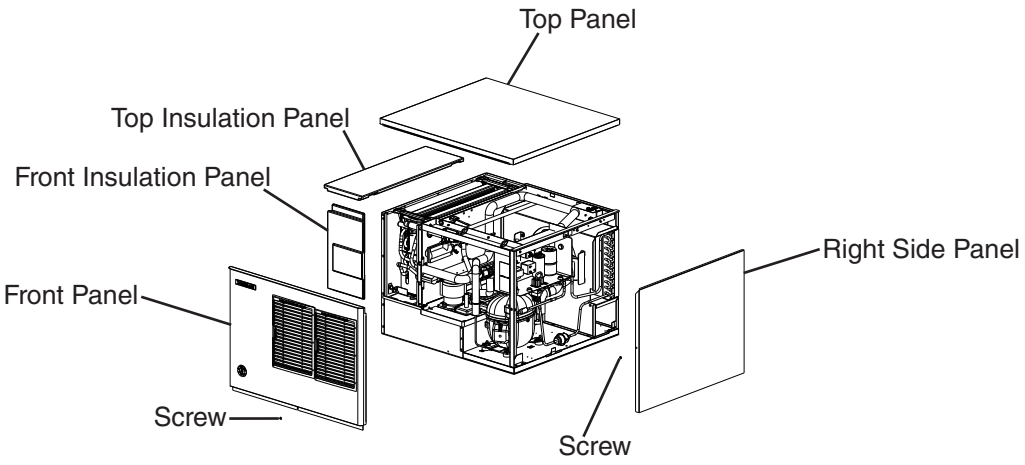

Fig. 1

D. Setup

1. Dispenser Unit/Ice Storage Bin Setup

Confirm the front, top, and right side panels are removed from the icemaker.

> **⚠ WARNING**
>
> The installer must ensure the dispenser unit/ice storage bin is compatible with the icemaker, and the dispenser unit/ice storage bin and icemaker are properly attached and secured.

1a) **Dispenser Unit:** Follow the dispenser unit's setup procedure.

1b) **Ice Storage Bin:** Unpack the ice storage bin and attach the 4 adjustable legs provided (bin accessory) to the bottom of the ice storage bin.

2) Position the dispenser unit/ice storage bin in its permanent location.

3) If required, install an adapter kit or top kit. Contact your local Hoshizaki distributor for recommendations.

4) Level the dispenser unit/ice storage bin in both the left-to-right and front-to-rear directions. If using an ice storage bin, adjust the ice storage bin legs to level.

2. Bin Control Installation

5) Remove the bin control, thumbscrews, and bin control bracket from the accessory bag.

6) Using the 2 thumbscrews secure the bin control to the bin control bracket.

7a) **No Top Kit Application**: Place the bin control assembly 4-1/2 in. (115 mm) from the left side of the dispenser or ice storage bin on the rear section of the dispenser or ice storage bin. See Figs. 2a, 2b, and 2c.

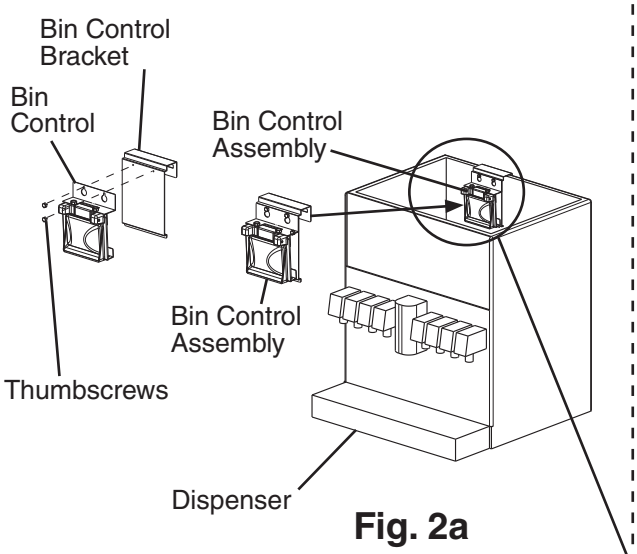

Fig. 2a

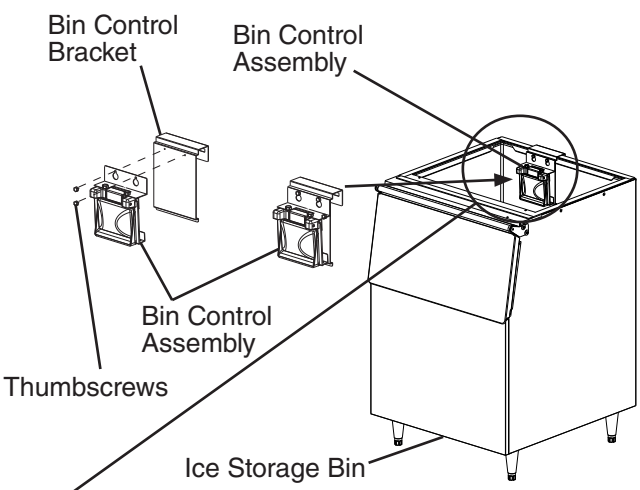

Fig. 2b

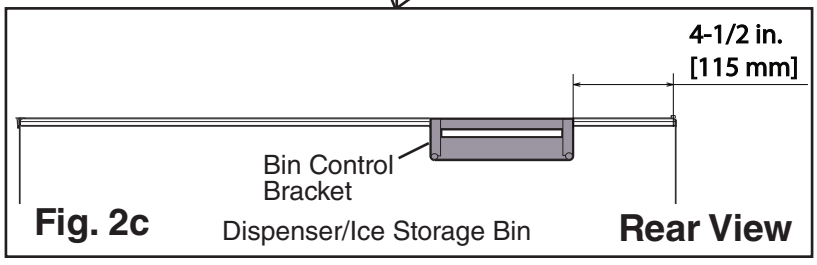

Fig. 2c

7b) **Top Kit Application**: Place the bin control assembly 4 1/2" (115 mm) from the left side of the icemaker on the rear section of the dispenser or ice storage bin. See Fig. 3.

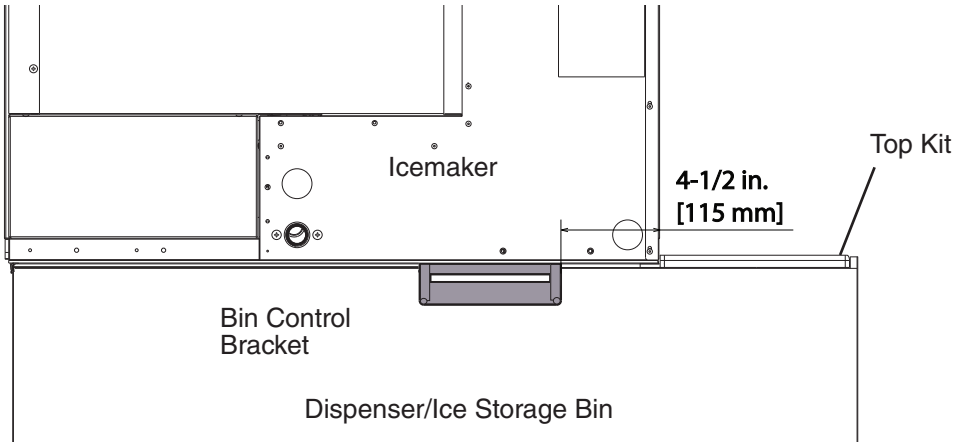

Fig. 3

3. Icemaker Installation

8) Place the icemaker on top of the dispenser unit/ice storage bin. See Figs. 4a and 4b. ***NOTICE!*** **Confirm bin control bracket is in its correct position.**

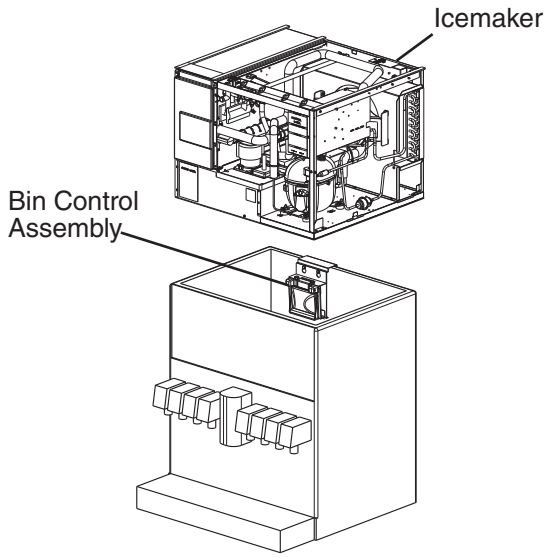

Fig. 4a

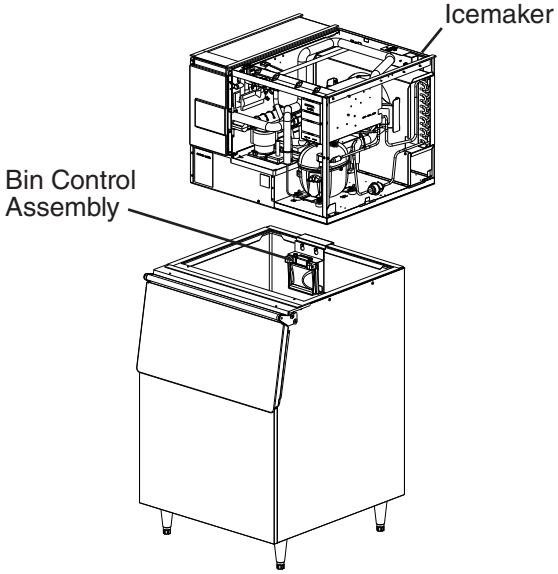

Fig. 4b

9a) **Dispenser Unit:** Follow the dispenser unit, adapter kit, or top kit instructions for securing the icemaker. If no instructions are available, secure the icemaker using the mounting brackets provided. Rotate the mounting brackets so that they fit flush to the dispenser unit. See Fig. 5a. Secure the mounting brackets to the icemaker with the bolts provided. Secure the mounting brackets to the dispenser unit with self-tapping screws (not provided). ***NOTICE!*** **Use care to avoid damage to dispenser unit components when attaching the mounting brackets.**

9b) **Ice Storage Bin:** Follow the ice storage bin, adapter kit, or top kit instructions for securing the icemaker. If no instructions are available, secure the icemaker using the 2 mounting brackets and the bolts provided. See Fig. 5b.

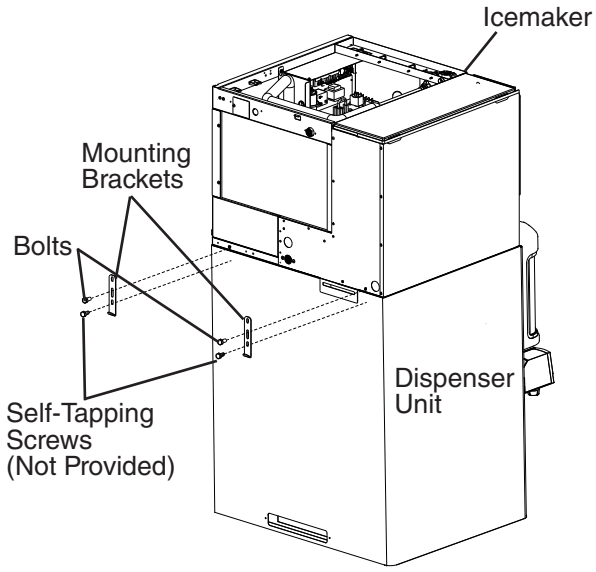

Fig. 5a

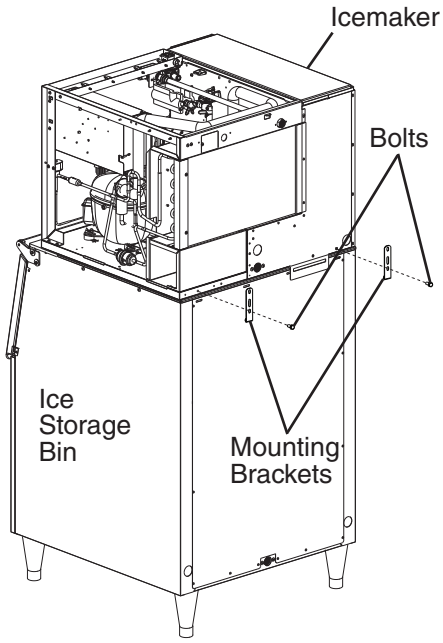

Fig. 5b

10) Remove the control box cover. If not already removed, remove the right side panel.

11) Remove the bin control cover thumbscrews, then remove the bin control cover. Route the bin control cable up through the capillary ring in the bin control cover as illustrated. Do not leave any slack in the ice drop zone. See Fig. 6. Note: Use the slot cut into the capillary ring for ease of routing the bin control wire.

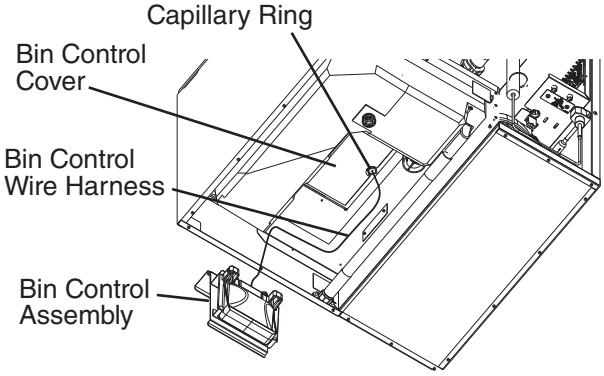

Bottom View

Fig. 6

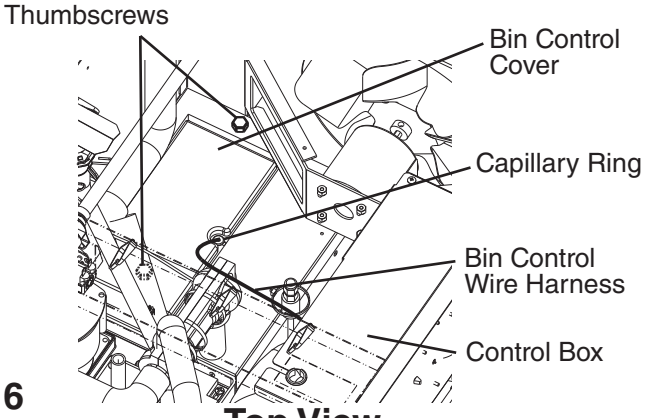

Top View

12) Secure bin control cover and capillary ring in their correct positions and secure with the 2 thumbscrews removed in step 11.

13) Continue routing the bin control cable up into the control box. See Fig. 7.
***IMPORTANT!* Care should be taken when routing the bin control cable to avoid moving objects (fan blade) and hot refrigeration piping (discharge line).**

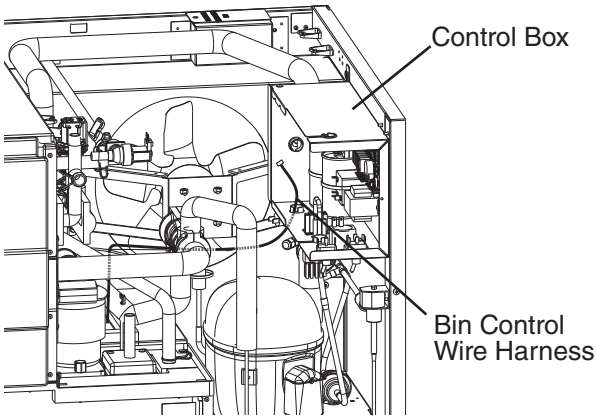

Fig. 7

14) Connect the bin control cable connector to the control board red K4 connector. See Fig. 8.

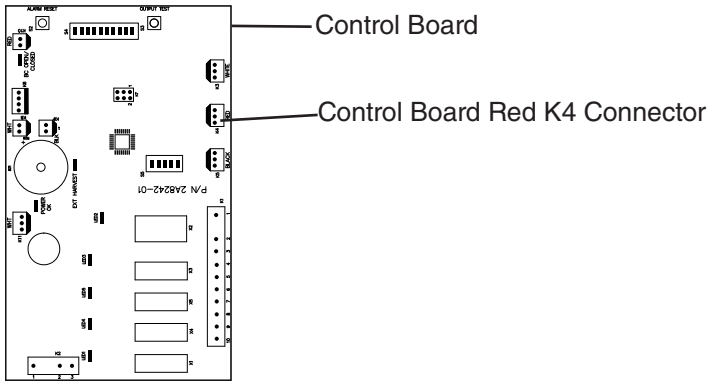

Fig. 8

15) Secure the bin control cable with nylon ties.

16) Replace the control box cover in its correct position and secure.

E. Electrical Connection

⚠ WARNING

For All Models

- Electrical connection must be hard-wired and must meet national, state, and local electrical code requirements. Failure to meet these code requirements could result in death, electric shock, serious injury, fire, or damage.
- The icemaker requires an independent power supply of proper capacity. See the nameplate for electrical specifications. Failure to use an independent power supply of proper capacity can result in a tripped breaker, blown fuse, damage to existing wiring, or component failure. This could lead to heat generation or fire.
- **THE ICEMAKER MUST BE GROUNDED.** Failure to properly ground the icemaker could result in death or serious injury.
- Electrical connection must be made in accordance with the instructions on the "WARNING" tag, provided with the pig tail leads in the junction box. See Fig. 9.

Additional Warnings for Remote Models

- **THE REMOTE CONDENSER UNIT MUST BE GROUNDED.** Power supply and ground wire to the remote condenser unit are supplied from the icemaker. See "II.G.6. Electrical Connection." Failure to properly ground the remote condenser unit could result in death or serious injury.
- To reduce the risk of electric shock, make all remote condenser unit connections before connecting the icemaker power supply.

NOTICE

On remote models, the appliance must have power for a minimum of 4 hours prior to startup to prevent compressor damage.

- Usually an electrical permit and services of a licensed electrician are required.
- The maximum allowable voltage variation is ±10 percent of the nameplate rating.
- The white lead must be connected to the neutral conductor of the power source. ***NOTICE!*** **Miswiring may result in severe damage to the icemaker.**
- The opening for the power supply connection is 7/8" DIA to fit a 1/2" trade size conduit.

KML-325M_J
KML-500M_J
KML-700M_J(Z)

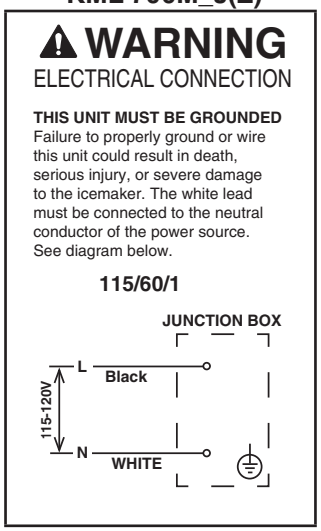

Fig. 9

F. Water Supply and Drain Connections
See Figs. 10 through 14

⚠ WARNING

Water supply and drain connections must be installed in accordance with applicable national, state, and local regulations.

NOTICE

- Normal operating water temperature should be within 45°F to 90°F (7°C to 32°C). Operation of the appliance, for extended periods, outside of this normal temperature range may affect appliance performance.
- Water supply pressure must be a minimum of 10 PSIG and a maximum of 113 PSIG. If the pressure exceeds 113 PSIG, the use of a pressure reducing valve is required.
- To prevent damage to the appliance, do not operate the appliance when the water supply is off, or if the pressure is below 10 PSIG. Do not run the appliance until the proper water pressure is reached.
- External filters, strainers, or softeners may be required depending on water quality. Contact your local Hoshizaki Certified Service Representative or local Hoshizaki distributor for recommendations.

- A plumbing permit and services of a licensed plumber may be required in some areas.
- The icemaker drain line, dispenser unit/ice storage bin drain line, and water-cooled condenser drain line (if applicable) must be run separately.
- Drain lines must have 1/4" fall per foot (2 cm per 1 m) on horizontal runs to provide a proper drain flow. A vented tee connection is also required for proper flow.
- Drain lines should not be piped directly to the sewer system. An air gap of a minimum of 2 vertical inches (5 cm) should be between the end of the drain pipes from the icemaker, dispenser unit/ice storage bin, and water-cooled condenser (if applicable) and the floor drain.

1. Icemaker

Icemaker Water Supply Inlet	Minimum Icemaker Water Supply Line Size	Icemaker Drain Outlet	Minimum Icemaker Drain Line Size
1/2" Female Pipe Thread (FPT)	1/4" Nominal ID Copper Water Tubing or Equivalent	3/4" Female Pipe Thread (FPT)	3/4" Nominal ID Hard Pipe or Equivalent

- An icemaker water supply line shut-off valve and drain valve must be installed.
- Be sure there is sufficient extra water supply line and drain line for the appliance to be pulled out for service.

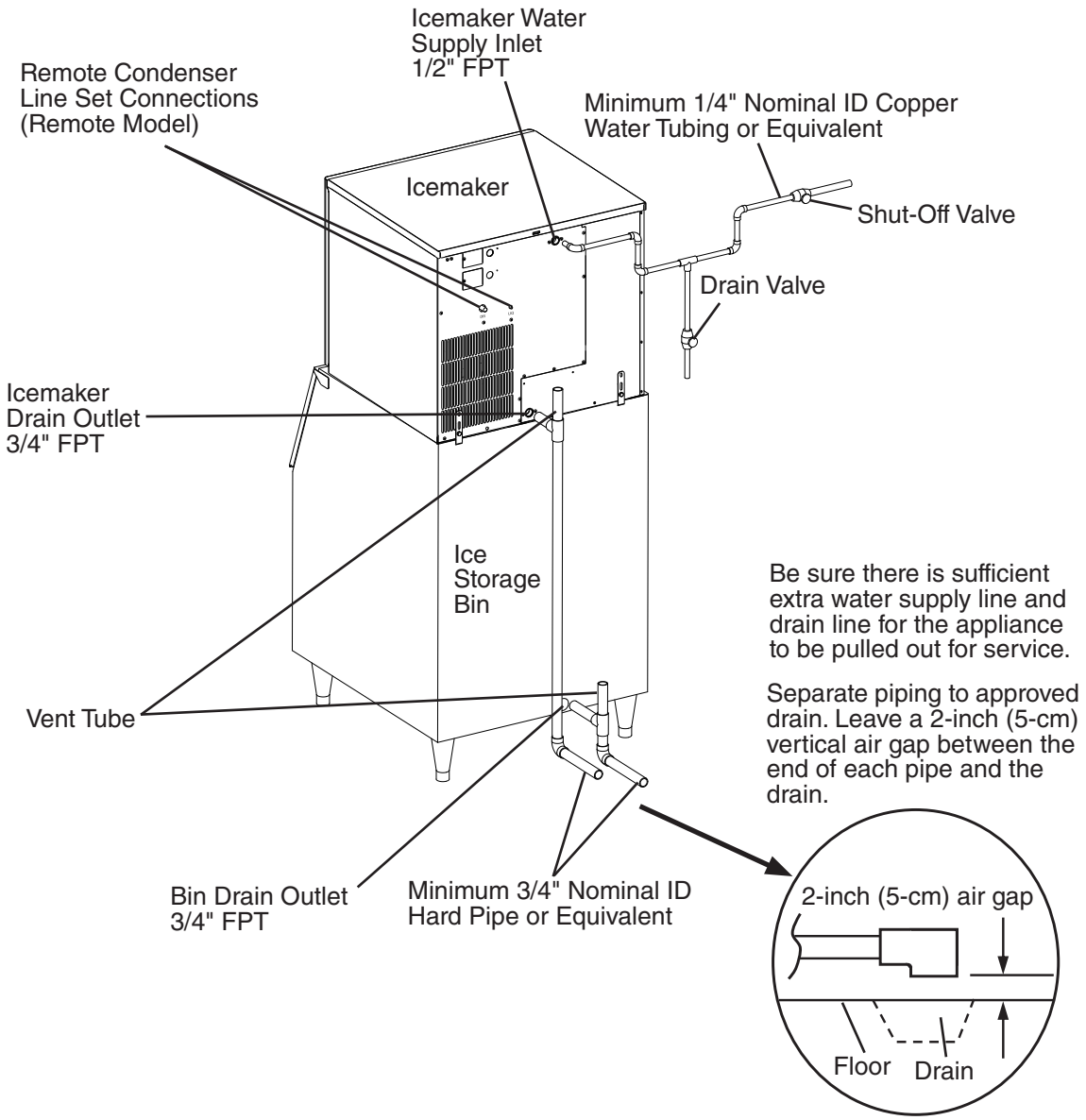

Fig. 10
Model Shown:
KML-700MRJZ

Air-Cooled and Remote Models

2. Water-Cooled Condenser

a) KML-325/500MWJ

(1) Connection to an Open Drain System

Condenser Water Supply Inlet	Minimum Condenser Water Supply Line Size	Condenser Drain Outlet	Minimum Condenser Drain Line Size
1/2" Female Pipe Thread (FPT)	1/4" Nominal ID Copper Water Tubing or Equivalent	3/8" Female Pipe Thread (FPT)	1/4" Nominal ID Hard Pipe or Equivalent

- A condenser water supply line shut-off valve and drain valve must be installed.
- In some areas, a back flow preventer may be required in the cooling water circuit.
- In order to maintain the proper high side pressure, the condenser water supply inlet temperature should not drop below 45°F (7°C) and the condenser drain outlet temperature must be in the 104°F to 115°F (40°C to 46°C) range. Once the icemaker installation is complete, confirm the condenser drain outlet temperature 5 minutes after a freeze cycle starts. If the condenser drain outlet temperature is not in the proper range, use a flat blade screwdriver to rotate the adjustment screw on the water-regulating valve until the temperature is in the proper range (rotate counterclockwise to raise temperature or clockwise to lower temperature).

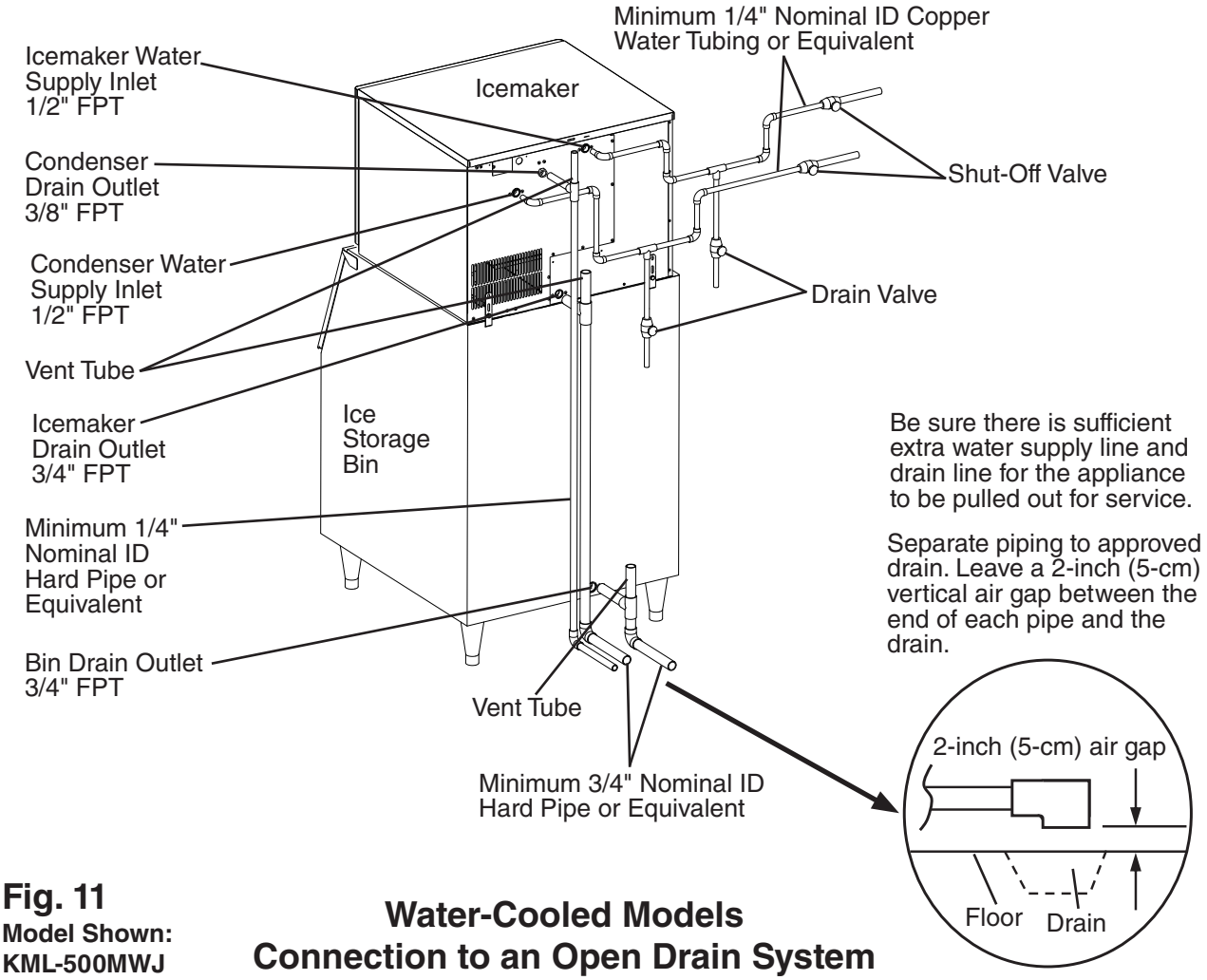

Fig. 11
Model Shown: KML-500MWJ

Water-Cooled Models
Connection to an Open Drain System

(2) Connection to a Closed Loop System

Condenser Water Supply Inlet	Minimum Condenser Water Supply Line Size	Condenser Return Outlet	Minimum Condenser Return Line Size
1/2" Female Pipe Thread (FPT)	1/4" Nominal ID Copper Water Tubing or Equivalent	3/8" Female Pipe Thread (FPT)	1/4" Nominal ID Copper Water Tubing or Equivalent

- Shut-off valves and drain valves must be installed at both the condenser water supply inlet and condenser return outlet.
- Minimum water flow to the condenser is 4 GPM.
- The pressure differential between the condenser water supply inlet and condenser return outlet must be no less than 10 PSIG.
- When using a glycol blend, the solution mixture should be less than 30% glycol.
- In order to maintain the proper high side pressure, the condenser water supply inlet temperature should not drop below 45°F (7°C) and the condenser return outlet temperature must be in the 104°F to 115°F (40°C to 46°C) range. Once the icemaker installation is complete, confirm the condenser return outlet temperature 5 minutes after a freeze cycle starts. If the condenser return outlet temperature is not in the proper range, use a flat blade screwdriver to rotate the adjustment screw on the water-regulating valve until the temperature is in the proper range (rotate counterclockwise to raise temperature or clockwise to lower temperature).

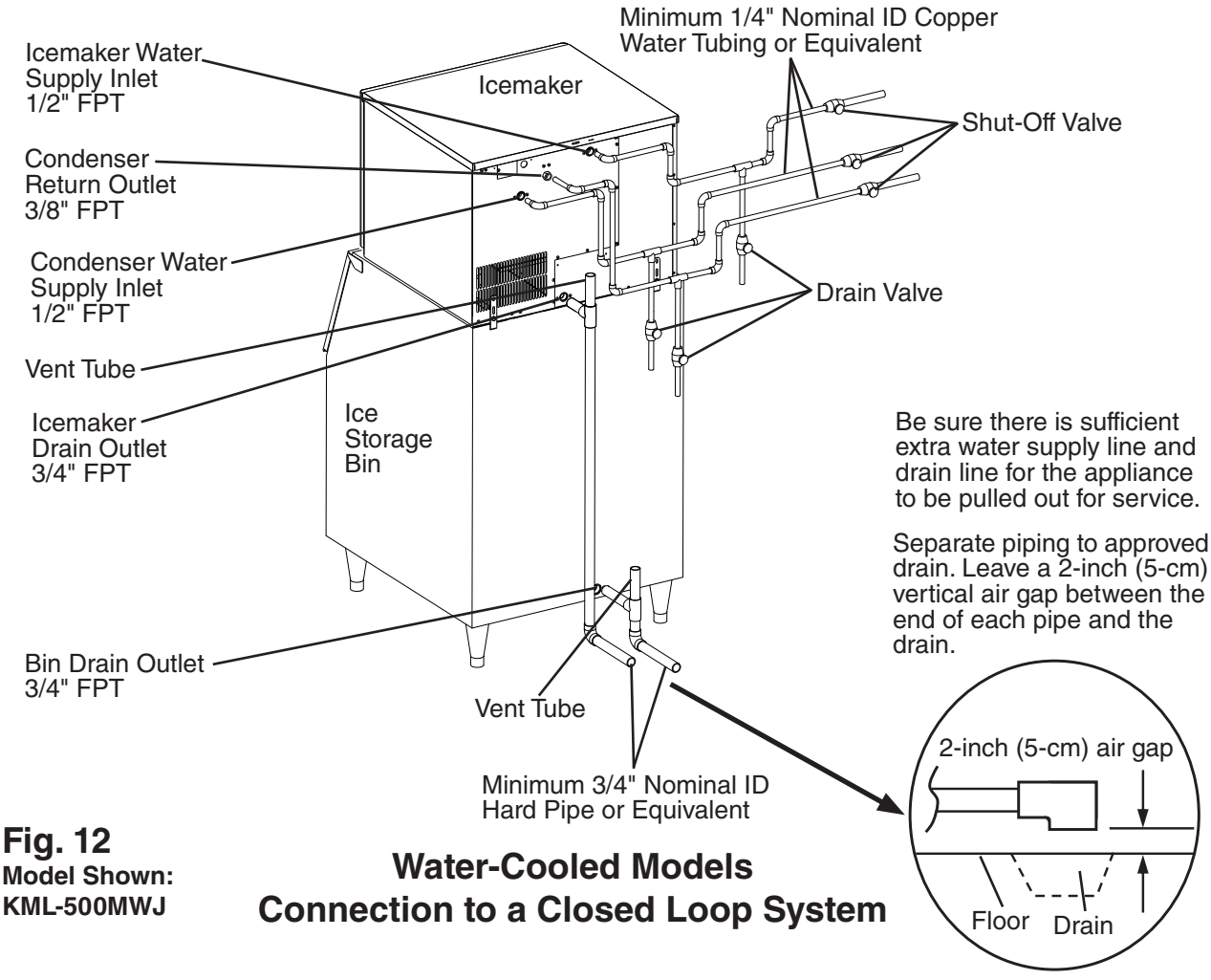

Fig. 12
Model Shown:
KML-500MWJ

Water-Cooled Models
Connection to a Closed Loop System

b) KML-700MWJ

(1) Connection to an Open Drain System

Condenser Water Supply Inlet	Minimum Condenser Water Supply Line Size	Condenser Drain Outlet	Minimum Condenser Drain Line Size
1/2" Female Pipe Thread (FPT)	1/4" Nominal ID Copper Water Tubing or Equivalent	3/8" Female Pipe Thread (FPT)	1/4" Nominal ID Hard Pipe or Equivalent

- A condenser water supply line shut-off valve and drain valve must be installed.
- In some areas, a back flow preventer may be required in the cooling water circuit.
- In order to maintain the proper high side pressure, the condenser water supply inlet temperature should not drop below 45°F (7°C) and the condenser drain outlet temperature must be in the 104°F to 115°F (40°C to 46°C) range. Once the icemaker installation is complete, confirm the condenser drain outlet temperature 5 minutes after a freeze cycle starts. If the condenser drain outlet temperature is not in the proper range, use a flat blade screwdriver to rotate the adjustment screw on the water-regulating valve until the temperature is in the proper range (rotate counterclockwise to raise temperature or clockwise to lower temperature).

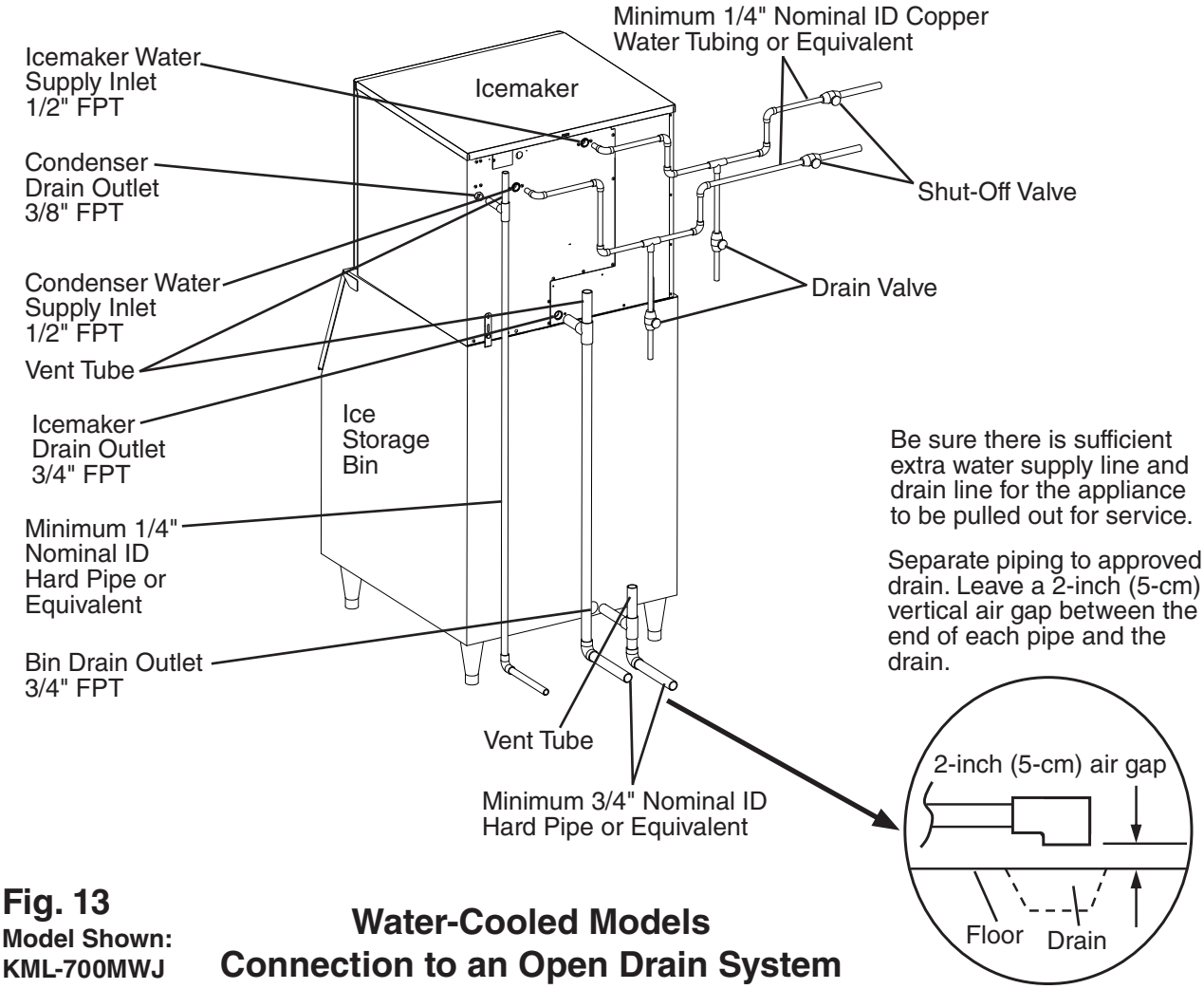

Fig. 13
Model Shown: KML-700MWJ

Water-Cooled Models
Connection to an Open Drain System

(2) Connection to a Closed Loop System

Condenser Water Supply Inlet	Minimum Condenser Water Supply Line Size	Condenser Return Outlet	Minimum Condenser Return Line Size
1/2" Female Pipe Thread (FPT)	1/4" Nominal ID Copper Water Tubing or Equivalent	3/8" Female Pipe Thread (FPT)	1/4" Nominal ID Copper Water Tubing or Equivalent

- Shut-off valves and drain valves must be installed at both the condenser water supply inlet and condenser return outlet.
- Minimum water flow to the condenser is 4 GPM.
- The pressure differential between the condenser water supply inlet and condenser return outlet must be no less than 10 PSIG.
- When using a glycol blend, the solution mixture should be less than 30% glycol.
- In order to maintain the proper high side pressure, the condenser water supply inlet temperature should not drop below 45°F (7°C) and the condenser return outlet temperature must be in the 104°F to 115°F (40°C to 46°C) range. Once the icemaker installation is complete, confirm the condenser return outlet temperature 5 minutes after a freeze cycle starts. If the condenser return outlet temperature is not in the proper range, use a flat blade screwdriver to rotate the adjustment screw on the water-regulating valve until the temperature is in the proper range (rotate counterclockwise to raise temperature or clockwise to lower temperature).

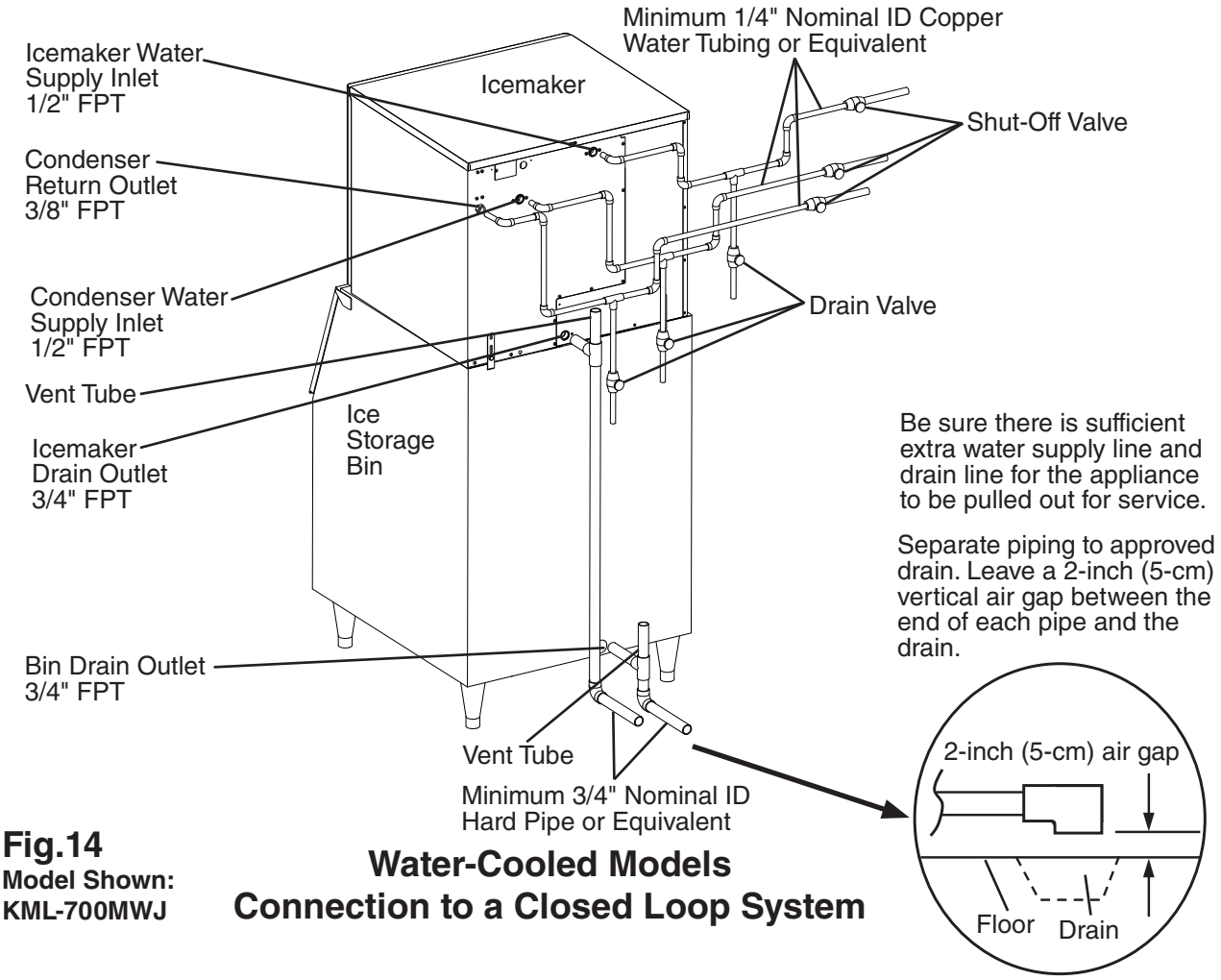

Fig.14
Model Shown:
KML-700MWJ

Water-Cooled Models
Connection to a Closed Loop System

G. Installation of Remote Condenser Unit

⚠ WARNING

- Installation of remote condenser unit must be performed by properly trained and EPA-certified service personnel.
- The remote condenser unit must be installed in accordance with applicable national, state, and local codes and regulations.
- Failure to install the remote condenser unit within these guidelines may adversely affect safety, performance, component life, and warranty coverage.
- Power supply and ground wire to the remote condenser unit are supplied from the icemaker. For details, see section "II.G.6. Electrical Connection."

1. Location

NOTICE

- The remote condenser unit is intended for outdoor use. Normal operating ambient temperature should be within -20°F to +122°F (-29°C to +50°C). Operation of the remote condenser unit, for extended periods, outside of this normal temperature range may affect icemaker performance.
- The maximum line length for the standard line sizes and refrigerant charge is 66 feet (20 m). With larger line sizes and/or additional refrigerant, the maximum line length is 100 feet (30.5 m). For details, see "II.G.4 Line Set Size and Refrigerant Charge."
- The maximum vertical distance between the remote condenser unit and the icemaker is 33 feet (10 m) above or 10 feet (3 m) below the icemaker. These distances are measured fitting to fitting. See Fig. 15.

The remote condenser unit must be positioned in a permanent site under the following guidelines:

- A firm and flat site.
- A dry and well ventilated area with 24" (61 cm) clearance at front and rear for proper air circulation and ease of maintenance and/or service should they be required. See Fig. 16.

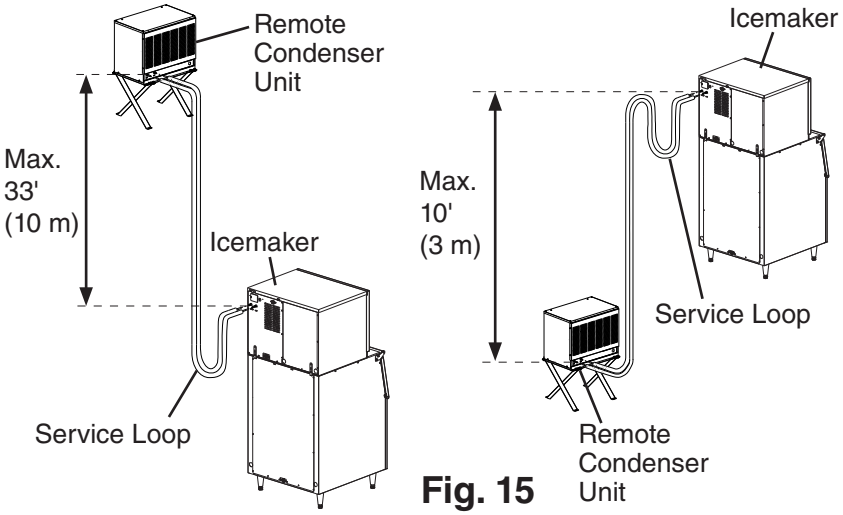

Fig. 15

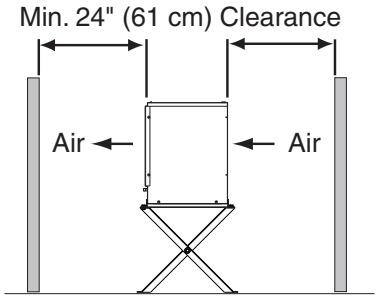

Fig. 16

2. Checks Before Installation

1) Remove the shipping carton, tape, and packing material.

2) Check that the refrigerant lines do not rub or touch lines or other surfaces, and that the fan blade moves freely.

3. Setup

1) Assemble two sets of legs using the legs, bolts, and nuts provided. See Fig. 17.

2) Position one of the plates provided between a set of legs and the remote condenser unit, then secure the legs to the remote condenser unit with the bolts and nuts provided. Repeat on the other side with the remaining set of legs.

3) The bottom of each leg has a mounting hole. Secure the legs to the permanent site with 4 bolts (not included).

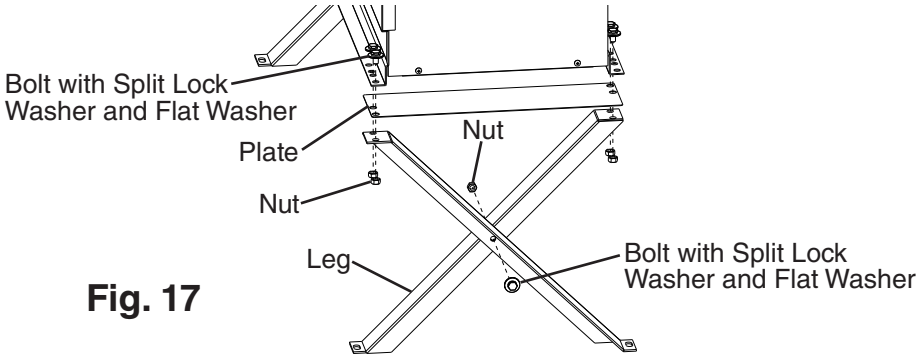

Fig. 17

4. Line Set Size and Refrigerant Charge

NOTICE
The icemaker, line set, and remote condenser unit must contain the same type of refrigerant. Mixing of refrigerants will result in improper operation and possible damage to the refrigeration system.

Line Set Size and Refrigerant Charge							
Hoshizaki Icemaker	**Hoshizaki Remote Condenser Unit**	**Line Set Up to 66 Feet (20 m)**			**Line Set Greater than 66 Feet (20 m) Maximum 100 Feet (30.5 m)**		
		Liquid Line	**Discharge Line**	**Charge Adjustment**	**Liquid Line**	**Discharge Line**	**Charge Adjustment (R-404A)**
KML-700MRJZ	URC-9FZ	3/8" OD	1/2" OD	Not Applicable	3/8" OD	1/2" OD	Add 0.4 oz. for each foot over 66 feet (40 g for each meter over 20 m). Write new total charge on icemaker's rating label.

5. Line Set Installation

⚠ WARNING

- R-404A itself is not flammable at atmospheric pressure and temperatures up to 176°F (80°C).
- R-404A itself is not explosive or poisonous. However, when exposed to high temperatures (open flames), R-404A can be decomposed to form hydrofluoric acid and carbonyl fluoride both of which are hazardous.
- Do not use silver alloy or copper alloy containing arsenic.
- Use an electronic leak detector or soap bubbles to check for leaks. Add a trace of refrigerant to the line set tubing through the service valve access ports (if using an electronic leak detector), and then raise the pressure using nitrogen gas (140 PSIG). Do not use R-404A as a mixture with pressurized air for leak testing.

NOTICE

- Do not open any service valve until the line set installation is complete and leak tested.
- Ensure that there are no traps and no kinks in the line set.
- Do not coil extra line set.

1) Route the factory line set or appropriate size copper tubing. When field fabricating, insulate the copper tubes separately. Leave a service loop behind the icemaker to allow the icemaker to be pulled out for service. See Fig. 15.

   Note: • The service loop is not considered an oil trap.
   • The maximum line length for the standard line sizes and refrigerant charge is 66' (20 m). With larger line sizes and/or additional refrigerant, the maximum line length is 100' (30.5 m). For details, see "II.G.4 Line Set Size and Refrigerant Charge."

2) Remove any extra line set length, then insulate the two copper tubes separately.

3) Remove the Schrader valve cores from the icemaker service valves.

NOTICE

- Before brazing, remove the Schrader valve cores from the service valve access ports.
- When brazing, protect the service valve by using a wet cloth to prevent the service valve from overheating.
- Braze all fittings while purging with nitrogen gas flowing at a pressure of 3 to 4 PSIG.

4) Braze the line set copper tubes to the icemaker liquid and discharge line service valves.

5) Remove the Schrader valve cores from the remote condenser unit service valve access ports.

6) Braze the line set copper tubes to the remote condenser unit liquid and discharge line service valves.

7) Allow the service valves to cool, then replace the Schrader valve cores. Attach the gauge manifold hoses.

8) Use an electronic leak detector or soap bubbles to check for leaks. Add a trace of refrigerant to the line set tubing through the service valve access ports (if using an electronic leak detector), and then raise the pressure using nitrogen gas (140 PSIG). **WARNING! Do not use R-404A as a mixture with pressurized air for leak testing.**

9) After checking the line set for leaks, vent the nitrogen charge from the line set.

10) Evacuate the line set. Allow the vacuum pump to pull down to a 29.9" Hg vacuum. Evacuating period depends on pump capacity.

11) After evacuation, charge each line set tube with R-404A vapor to a pressure of 15 to 30 PSIG.

12) Close both gauge manifold valves.

13) If the line set exceeds 66' (20 m), see "II.G.4. Line Set Size and Refrigerant Charge" for proper charging of the appliance. If not, continue to step 14.

14) Open the icemaker service valves first, then open the remote condenser unit service valves.

15) Disconnect the gauge manifold hoses.

16) Replace all service valve caps and tighten.

17) Insulate all exposed tubing and fittings.

6. Electrical Connection

⚠ WARNING

- Electrical connection must meet national, state, and local electrical code requirements. Failure to meet these code requirements could result in death, electric shock, serious injury, fire, or damage.
- To reduce the risk of electric shock, make all remote condenser unit connections before connecting the icemaker power supply.
- **THE REMOTE CONDENSER UNIT MUST BE GROUNDED.** Install a ground wire from the icemaker's fan motor junction box to the remote condenser unit's junction box. Use wire of an appropriate gage and outdoor rating. Failure to properly ground the remote condenser unit could result in death or serious injury.
- Install line and neutral wires from the fan motor leads in the icemaker's fan motor junction box to the leads in the remote condenser unit's junction box. Use wire of an appropriate gage and outdoor rating.
- Do not connect the fan motor leads in the icemaker to incoming power source. Do not connect the fan motor leads in the icemaker together. Do not allow the leads to contact the junction box walls.
- Do not connect the remote condenser unit to an external power source.

NOTICE

On remote models, the icemaker must have power for a minimum of 4 hours prior to startup to prevent compressor damage.

- Usually an electrical permit and services of a licensed electrician are required.
- The opening for the power supply connection is 7/8" DIA to fit a 1/2" trade size conduit.

1) Remove the remote condenser unit louver panel. See Fig. 18.

2) Remove the icemaker fan motor junction box cover. Remove the remote condenser unit junction box cover.

Fig. 18

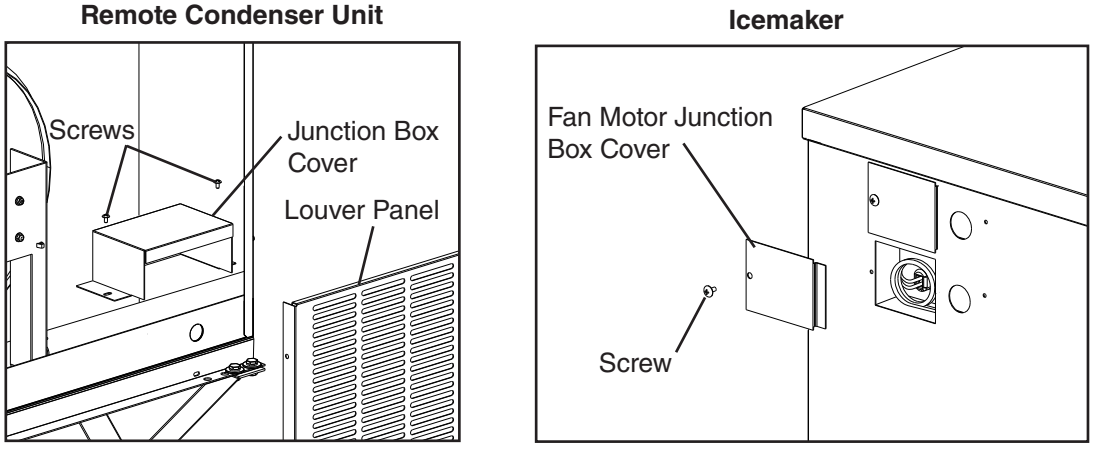

3) Install a ground wire from the icemaker fan motor junction box to the remote condenser unit junction box. Use wire of an appropriate gage and outdoor rating.

4) Install line and neutral wires from the fan motor leads in the icemaker fan motor junction box to the leads in the remote condenser unit junction box. Use wire of an appropriate gage and outdoor rating.

5) Replace the junction box covers and the louver panel in their correct positions.

7. Stacking Remote Condenser Unit

1) Install the lower remote condenser unit as described earlier in this section.

2) Place the upper remote condenser unit on top of the lower. See Fig. 19.

3) Secure the upper remote condenser unit to the lower remote condenser unit with the 4 screws provided.

4) Install refrigerant lines and make electrical connection as described earlier in this section.

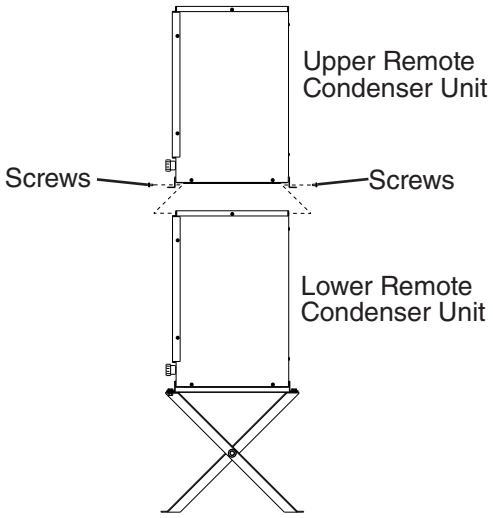

Fig. 19

H. Final Checklist

1. Pre-Startup

1) Is the icemaker level?
2) Is the icemaker in a site where the ambient temperature is within 45°F to 100°F (7°C to 38°C) and the water temperature within 45°F to 90°F (7°C to 32°C) all year around?
3) Is there at least 6" (15 cm) clearance at rear, sides, and top of the icemaker?
4) Have the shipping carton, tape, and packing material been removed from the icemaker? Is the cube guide in the correct position?
5) Have all electrical and water connections been made? Do electrical and water connections meet applicable national, state, and local code and regulation requirements?
6) Has the power supply voltage been checked or tested against the nameplate rating? Has a proper ground been installed to the icemaker? On remote models, has a proper ground also been installed to the remote condenser unit?
7) Are the water supply and drain lines sized as specified? Are the water supply line shut-off valve(s) and drain valve(s) installed? Has the water supply pressure been checked to ensure a minimum of 10 PSIG and a maximum of 113 PSIG?
8) Is the compressor snug on all mounting pads? Have the refrigerant lines been checked to make sure they do not rub or touch other lines or surfaces? Has the fan blade (if applicable) been checked to make sure it turns freely?
9) On remote models:
   - Is the line set sized as specified, insulated, tightened, and free of leaks and kinks?
   - If the line set exceeds 66' (20 m), has the line set size (if applicable) and charge been adjusted as specified?
   - Has the appliance power supply been on for a minimum of 4 hours?
   - Is the remote condenser unit in a site where the ambient temperature is within -20°F to +122°F (-29°C to +50°C) all year around?
   - Is there at least 24" (61 cm) clearance around the remote condenser unit?

2. Post-Startup

⚠ WARNING
CHOKING HAZARD: Ensure all components, fasteners, and thumbscrews are securely in place after installation. Make sure that none have fallen into the dispenser unit/ice storage bin.

1) Has the bin control been properly installed?
2) Has the bin control operation been confirmed?
3) Are all components, fasteners, and thumbscrews securely in place?
4) Has the end user been given the instruction manual, and instructed on how to operate the appliance and the importance of the recommended periodic maintenance?
5) Has the end user been given the contact information of an authorized service agent?
6) Has the warranty registration been completed and submitted to the factory?

I. Startup

⚠ WARNING

All parts are factory-adjusted. Improper adjustments may adversely affect safety, performance, component life, and warranty coverage.

NOTICE

- If the icemaker is turned off, wait for at least 3 minutes before restarting the icemaker to prevent damage to the compressor.
- To prevent damage to the water pump, do not leave the control switch in the "PUMP" position for extended periods when the water tank is empty.
- At startup, confirm that all internal and external connections are free of leaks.

Additional Notice for Remote Models

- The icemaker must have power for a minimum of 4 hours prior to startup to prevent compressor damage.

1) Open the water supply line shut-off valve(s).

2) If not already removed, remove the front panel. See Fig. 20.

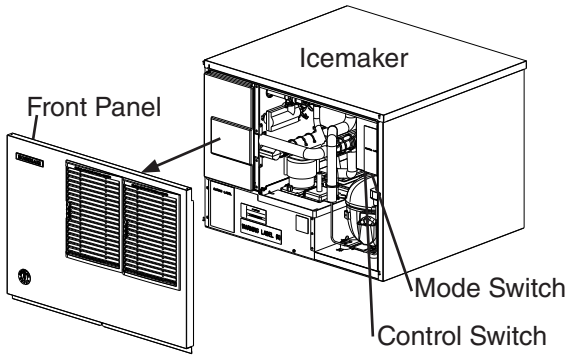

Fig. 20

3) Move the mode switch on the control box to the "ICE" position, then move the control switch to the "ON" position.

4) Confirm bin control operation.

   a) **Dispenser Application**: If not already off, turn the dispenser power supply off. Remove the icemakers front and top panels. Next, remove the bin control cover to access the bin control. Turn on the power supply, and allow the icemaker to operate. Using a long firm non-conductive device (e.g., PVC pipe), press and hold the bin control's actuator paddle. The icemaker should shut down in approximately 15 seconds (see the table below). After the icemaker shuts down, move the control switch to the "OFF" position, then turn off the power supply.
   WARNING! Care should be taken to avoid moving components (fan blade) and hot compressor discharge tubing.

   b) **Ice Storage Bin Application**: Raise the ice storage bin door and access the bin control from the bin area. Turn on the power supply, and allow the icemaker to operate. Press and hold the bin control's actuator paddle in the closed position. The icemaker should shut down in approximately 15 seconds (see the table below). After the icemaker shuts down, move the control switch to the "OFF" position, then turn off the power supply.

When BC is activated (BC open), the yellow "BC OPEN" LED comes on. The icemaker then shuts down as outlined in the table below.

Cycle at Bin Control Activation	Shutdown
Fill Cycle	15 seconds after activation.
Harvest Cycle	At the end of the harvest cycle, or up to 15 seconds into the freeze cycle if activated at the end of the harvest cycle.
Freeze Cycle	15 seconds after activation if activated at least 15 seconds before the 5-min. short cycle protection timer terminates. Otherwise, at the end of the next harvest cycle.

5) Move the control switch to the "ICE" position.

6) Replace and secure all panels in their correct positions.

7) Turn on the power supply, and allow the icemaker to operate for a total of 10 minutes.

8) After 10 min. of operation, remove the front panel, then move the control switch to the "OFF" position. Turn off the power supply.

9) Remove the front panel and front insulation panel. Next, remove the drain plug located in the bottom of the water tank. Allow the water tank to drain. See Fig. 21.

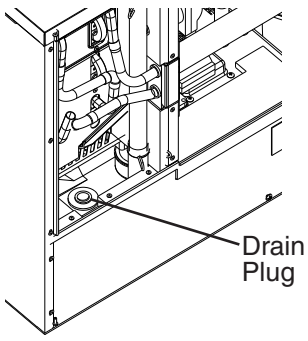

Fig. 21

10) After the water tank has drained, replace the drain plug in its correct position. Be careful not to cross thread the drain plug.

11) Clean the dispenser unit/ice storage bin liner using a neutral cleaner. Rinse thoroughly after cleaning.

12) Replace the front insulation panel and front panel in their correct positions, then turn on the power supply to start the automatic icemaking process.

13) On water-cooled models, confirm proper condenser drain outlet/return outlet temperature as outlined in "II.F.2. Water-Cooled Condenser."

III. Maintenance

The appliance must be maintained in accordance with the instruction manual and labels provided. Consult with your local Hoshizaki Certified Service Representative about maintenance service.

⚠ WARNING

- Only qualified service technicians should service the appliance.
- To reduce the risk of electric shock, do not touch the control switch or service switch with damp hands.
- Move the control switch to the "OFF" position and turn off the power supply before servicing. Lockout/Tagout to prevent the power supply from being turned back on inadvertently.
- **CHOKING HAZARD:** Ensure all components, fasteners, and thumbscrews are securely in place after any maintenance is done to the appliance. Make sure that none have fallen into the dispenser unit/ice storage bin.

A. Maintenance Schedule

The maintenance schedule below is a guideline. More frequent maintenance may be required depending on water quality, the appliance's environment, and local sanitation regulations.

Maintenance Schedule		
Frequency	**Area**	**Task**
Daily	Scoop	Clean the ice scoop using a neutral cleaner. Rinse thoroughly after cleaning.
Bi-Weekly	Air Filters	Inspect. Wash with warm water and neutral cleaner if dirty.
Monthly	External Water Filters	Check for proper pressure and change if necessary.
	Icemaker Exterior	Wipe down with a clean, soft cloth. Use a damp cloth containing a neutral cleaner to wipe off oil or dirt build up. Clean any chlorine staining (rust colored spots) using a non-abrasive cleanser.
	Underside of Icemaker and Top Kits; Bin Door and Snout	Wipe down with a clean cloth and warm water.
Yearly	Icemaker and Dispenser Unit/Ice Storage Bin	Clean and sanitize per the cleaning and sanitizing instructions provided in this manual. See "III.B. Cleaning and Sanitizing Instructions."
	Water Supply Inlet	Close the icemaker water supply line shut-off valve and drain the water system. Clean the water supply inlet screen.
	Condenser	Inspect. Clean if necessary by using a brush or vacuum cleaner. More frequent cleaning may be required depending on location.
	Water Hoses	Inspect the water hoses and clean/replace if necessary.

B. Cleaning and Sanitizing Instructions

The icemaker must be cleaned and sanitized at least once a year. More frequent cleaning and sanitizing may be required in some water conditions.

⚠ WARNING

- To prevent injury to individuals and damage to the icemaker, do not use ammonia type cleaners.
- Carefully follow any instructions provided with the bottles of cleaning and sanitizing solution.
- Always wear liquid-proof gloves and goggles to prevent the cleaning and sanitizing solutions from coming into contact with skin or eyes.
- Do not leave the icemaker unattended when panels are off.

NOTICE

To prevent damage to the water pump, do not leave the control switch in the "PUMP" position for extended periods when the water tank is empty.

Preparation

1) Remove the front panel, then move the control switch to the "OFF" position. Make sure the mode switch is in the "ICE" position. After 3 minutes, move the control switch to the "ON" position and replace the front panel.
2) Allow the appliance to run until the compressor energizes. Once the compressor energizes, allow the appliance to run for an additional 3 minutes, then remove the front panel. Move the control switch to the "OFF" position.
3) Remove all ice from the dispenser unit/ice storage bin. **WARNING! If on a dispenser unit, turn off the dispenser unit power supply after dispensing the ice.**

Cleaning

4) Move the mode switch to the "CLEAN" position, then move the control switch to the "ON" position (1 short beep occurs, then 3 seconds later 1 long beep occurs). Replace the front panel. The water tank drains and then fills.
5) When the control board starts beeping (2 beep sequence), remove the front panel. Move the control switch to the "OFF" position.
6) Remove the front insulation panel, then pour Hoshizaki "Scale Away" into the water tank. See table below for amount. Replace the front insulation panel.

Model	Scale Away
KML-325/500	9 fl. oz. (266 ml)
KML-700	12 fl. oz (355 ml)

7) Move the control switch to the "ON" position (1 short beep occurs, then 3 seconds later 1 long beep occurs). Replace the front panel. To avoid excessive foaming in the water tank, there is a 1 minute delay before circulation begins. After approximately 30 minutes of circulation, the icemaker performs 3 rinse cycles.

8) When the control board starts beeping (5 beep sequence), remove the front panel. Move the control switch to the "OFF" position.

9) In bad or severe water conditions, turn off the power supply, then remove, clean (cleaning solution = 5 oz. Hoshizaki "Scale Away" per gallon of warm water), rinse, and replace the cube guide, float switch, water supply tubes, spray tubes, and spray guides; turn on the power supply when complete. Otherwise, continue to step 10.

Sanitizing

10) Confirm the mode switch is in the "CLEAN" position, then move the control switch to the "ON" position (1 short beep occurs, then 3 seconds later 1 long beep occurs). Replace the front panel. The water tank drains and then fills.

11) When the control board starts beeping (2 beep sequence), remove the front panel. Move the control switch to the "OFF" position.

12) Remove the front insulation panel, then pour 7.5% sodium hypochlorite solution (chlorine bleach) into the water tank. See table below for amount. Replace the front insulation panel.
IMPORTANT! Use regular bleach with no additives. Using a bleach with additives causes excessive foaming during sanitizing, reducing the effectiveness of sanitizing.

Model	7.5% Sodium Hypochlorite Solution (Chlorine Bleach)
KML-325/500	0.6 fl. oz. (17 ml)
KML-700	0.8 fl. oz. (23 ml)

13) Move the control switch to the "ON" position (1 short beep occurs, then 3 seconds later 1 long beep occurs). Replace the front panel. To avoid excessive foaming in the water tank, there is a 1 minute delay before circulation begins. After approximately 30 minutes of circulation, the icemaker performs 3 rinse cycles.

14) When the control board starts beeping (5 beep sequence), remove the front panel. Move the control switch to the "OFF" position.

15) Clean the dispenser unit/ice storage bin liner using a neutral cleaner. Rinse thoroughly after cleaning.

16) Move the mode switch to the "ICE" position, then move the control switch to the "ON" position. Note: If on a dispenser unit, turn on the dispenser unit power supply.

17) Replace all panels in their correct positions.

IV. Preparing the Icemaker for Periods of Non-Use

NOTICE
• When storing the icemaker for an extended time or in sub-freezing temperatures, follow the instructions below to prevent damage. • To prevent damage to the water pump, do not leave the control switch in the "PUMP" position for extended periods when the water tank is empty.

When the icemaker is not used for two or three days under normal conditions, it is sufficient to move the control switch to the "OFF" position. When storing the icemaker for an extended time or in sub-freezing temperatures, follow the instructions below.

1. Remove the water from the icemaker water supply line:

1) Remove the front panel. Move the control switch to the "OFF" position, then turn off the power supply.
2) Close the icemaker water supply line shut-off valve, then open the icemaker water supply line drain valve.
3) Allow the line to drain by gravity.
4) Attach a compressed air or carbon dioxide supply to the icemaker water supply line drain valve.
5) Move the control switch to the "ICE" position.
6) Replace the front panel in its correct position, then turn on the power supply.
7) Blow the icemaker water supply line out using the compressed air or carbon dioxide supply.
8) Close the icemaker water supply line drain valve.

2. Drain the water tank:

1) Remove the front panel. Move the control switch to the "OFF" position, then turn off the power supply.

2) Remove the front insulation panel, then remove the water tank drain plug located in the bottom of the water tank. See Fig. 22. Allow the water tank to drain.

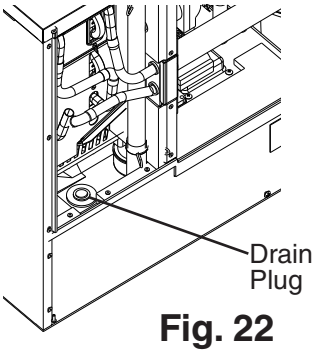

Fig. 22

3) After the water tank has drained, replace the drain plug in its correct position. Be careful not to cross thread the drain plug.

4) Replace the front insulation panel and front panel in their correct positions.

5) Remove all ice from the dispenser unit/ice storage bin. Clean the dispenser unit/ice storage bin liner using a neutral cleaner. Rinse thoroughly after cleaning.

3. On water-cooled model, remove the water from the water-cooled condenser:

1) Make sure the power supply is off, then remove the front, top, and right side panels.

2) Close the condenser water supply line shut-off valve. If connected to a closed loop system, also close the condenser return line shut-off valve.

3) Open the condenser water supply line drain valve. If connected to a closed loop system, also open the condenser return line drain valve.

4) Attach a compressed air or carbon dioxide supply to the condenser water supply line drain valve.

5) Open the water regulating valve by using a screwdriver to pry up on the spring retainer underneath the spring. While holding the valve open, blow out the condenser using the compressed air or carbon dioxide supply until water stops coming out.

6) Close the drain valve(s).

7) Replace the right side, top, and front panels in their correct positions.

V. Disposal

The appliance contains refrigerant and must be disposed of in accordance with applicable national, state, and local codes and regulations. Refrigerant must be recovered by properly certified service personnel.

HOSHIZAKI AMERICA, INC.

618 Hwy. 74 South, Peachtree City, GA 30269 USA (P) 770.487.2331 (F) 770.487.3360 hoshizakiamerica.com

1A6926-010